
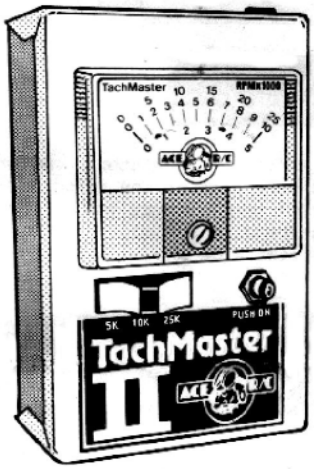


## I. INTRODUCTION

Accurate measurement of model aircraft engine performance is extremely important in engine life and upkeep, prop selection, and optimizing for a particular aircraft design. Sport and competition flyers alike need nothing less than an excellent tachometer to accomplish this. The Ace Tachmaster II was created to provide the required accuracy, ease of use, non-confusing meter scale, and a cost that is less than half of the so-called "super" tachs.

In addition to our primary goal of creating a tachometer which provides fine performance at a reasonable cost, we at all times wanted to keep the construction reasonably simple so that it would provide the first time kit builder a great margin of success. We feel that all these objectives have been accomplished.

## II. OPERATION

If you have obtained an assembled Tachmaster II, it has been tested and calibrated. All that's necessary to get it operational is to remove the back and install a 9V Transistor battery (Alkaline type is recommended.) The battery slips into the bracket provided in the bottom of the case. Re-install the back.

While you're inside a room with fluorescent lights on, push the "ON" button and note the meter needle deflection; it should be higher with the range switch in the 0-5000 range, lower in the 0-10,000, and even lower in the 0-25000 range.

Operation in the field is straight forward and will provide you with an accurate RPM measurement on any engine with a two bladed prop. Please observe the following suggestions:

First of all, try to keep the tach fairly level when taking readings as this is how the meter was calibrated and gravity can influence any meter. You will probably find that you achieve better and more consistant RPM readings when the detector in the top of the case is aimed about half-way to 2/3rds out on the prop from the engine spinner or crankshaft. Try to keep the sun over one shoulder when taking readings. On cloudy or overcast days you may have to hunt just a bit for the best position when taking readings and this is normal. Readings should be taken at about 4-6 inches from the propeller but lighting conditions can change this too, so use whatever works best for you.

The circuitry of the Tachmaster II uses so little current, a fresh 9V battery will last all flying season, and then some. However, it will tell you when it is time to replace the battery by giving erratic or totally ridiculous readings.

The Tachmaster II is a fine unit and should be treated as such. Carry it to and from the flying site somewhere in your field box where it will not be battered around and abused by other goodies in that part of the box. The meter face will scratch fairly easily. A fabric bag could be made to protect it from abuse.

## III. PARTS LIST

Resistors: (5% unless specified)

[ ] 4 R4-103 10K Brn,Blk,Or,Gld
[ ] 2 R4-103B 10K 1% Brn,Blk,Blk,Rd,Brn
[ ] 1 R4-124B 121K 1% Brn,Rd,Brn,Or,Brn
[ ] 1 R4-105 1 Meg Brn,Blk,Grn,Gld
[ ] 1 R4-153B 15K 1% Brn,Grn,Blk,Rd,Brn
[ ] 1 R4-333 33K Or,Or,Or,Gld
[ ] 2 R4-471 470 Ohm Yel,Vio,Brn,Gld
[ ] 3 R4-472 4.7K Yel,Vio,Rd,Gld
[ ] 5 R4-473 47K Yel,Vio,Or,Gld
[ ] 2 R4-492B 4.99K 1% Yel,Wht,Wht,Brn,Brn
[ ] 1 RV078 5K Vertical Trim Pot

Capacitors:

[ ] 1 CD102 .001 mf Disc (.001p)
[ ] 1 CD221 220 pf Disc (221K)
[ ] 2 CE475PI 4.7 mf Electrolytic, P.I.
[ ] 1 CT475A 4.7 mf Dipped Tantalum
[ ] 1 CY103 .01 mf Mylar 5%
[ ] 2 CY104 .1 mf Mylar (104K)

Semiconductors:

[ ] 2 SS121 1N4446 Diode
[ ] 4 SS029 2N4400 Transistor
[ ] 1 SS041 LM340 Voltage Regulator
[ ] 1 SS087 LM324 IC
[ ] 1 SS151 GEL14G2 Photo Transistor

Hardware:

[ ] 4 HW040 2-56 X 3/16" Flat Head Screw
[ ] 4 HW001 2-56 Nut
[ ] 2 HW010H 7mm Nut
[ ] 1 HW020D 7mm Washer
[ ] 2 HW111 #2 X 3/16 Self Tap
[ ] 2 HW080 4-40 X 1/8 Screw
[ ] 2 HW192 L-Bracket
[ ] 1 HW171 #4 Solder Lug

Miscellaneous:

[ ] 1 PC153A TachMaster II PC Board
[ ] 1 MT010A TachMaster II Meter
[ ] 1 SW018 DP3T Slide Switch
[ ] 1 SW010 SPST N.O.Push Switch
[ ] 1 PLA381 Slide Switch Topper
[ ] 1 SM192A TachMaster II Metal Case
[ ] 1 LB092A TachMaster II Case Label
[ ] 1 CC042 9V Battery Connector, sm.
[ ] 1 SM191A Battery Bracket
[ ] 1 RP015A #1A Grommet
[ ] 6" Ea. Red, Black, Green, Blue, Yellow, White Hookup Wire
[ ] 6" Yellow, 4" Brown, 3" Orange Hookup Wire
[] 36" Solder

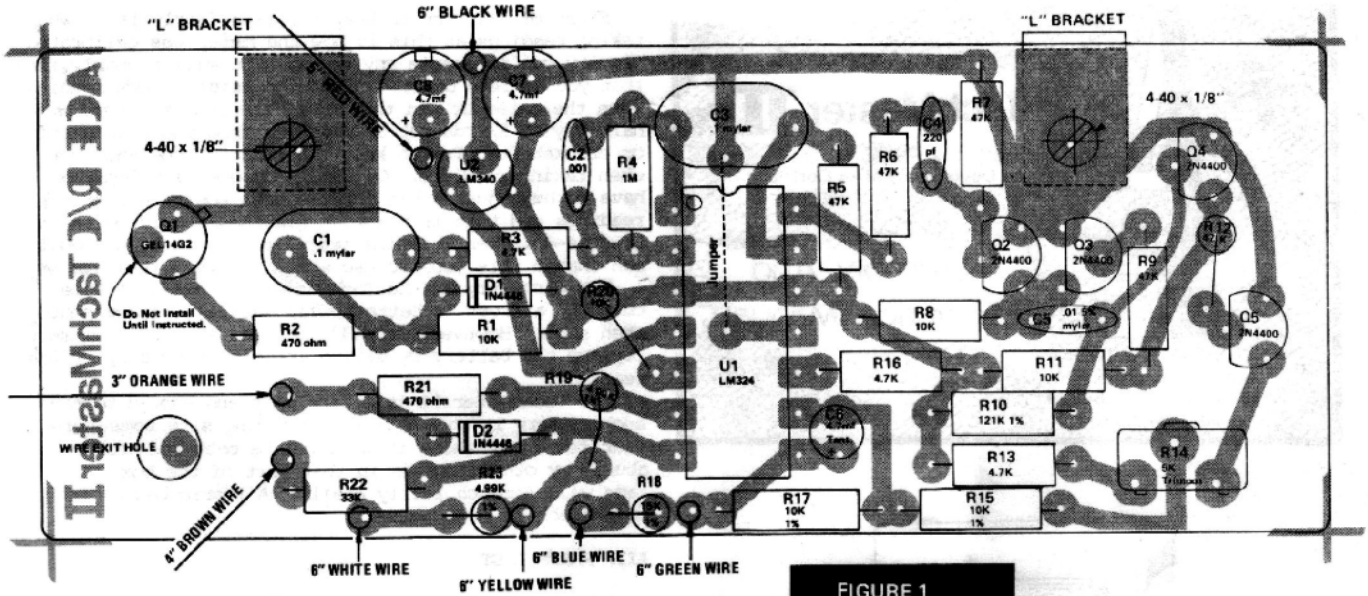


FIGURE 1
PC OVERLAY

**PARTS ID AID**

Resistor Color Code

| | |
|---|---|
| 10K | Brn,Blk,Or,Gld |
| 10K 1% | Brn,Blk,Blk,Rd,Brn |
| 121K 1% | Brn,Rd,Brn,Or,Brn |
| 15K 1% | Brn,Grn,Blk,Rd,Brn |
| 1 Meg | Brn,Blk,Grn,Gld |
| 33K | Or,Or,Or,Gld |
| 470 Ohm | Yel,Vio,Brn,Gld |
| 4.7K | Yel,Vio,Rd,Gld |
| 47K | Yel,Vio,Or,Gld |
| 4.99K 1% | Yel,Wht,Wht,Brn,Brn |

DIPPED TANTALUM

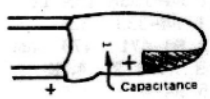


ALUMINUM ELECTROLYTIC


**IV. CONSTRUCTION**

( ) Read the "Kit Builders Hints" thoroughly.

( ) Check the parts received against the parts list. Notify Ace R/C of any shortages.

REFER TO FIGURE 1, PC OVERLAY DRAWING, FOR THE FOLLOWING STEPS:

( ) Begin by installing and soldering resistor R1 (10K-Brn,Blk,Or). Clip off the excess leads and save for the next step.

( ) Note there is a jumper that must be installed on the circuit board. Use one of the resistor leads from the preceeding step. Carefully bend the lead so it will lay flat and straight between the holes otherwise it could short the pins of IC U1 when it is installed later.

( ) Install and solder diodes D1 and D2 (1N4446) making sure that the banded ends (cathodes) are as shown on the overlay drawing.

( ) Install and solder all of the resistors that lie flat on the circuit board. These include all of the resistors except R12,R18,R19,R20 and R23. Be absolutely sure that the 1% precision resistors are installed in the proper place. Double check the component overlay when doing this.

( ) Install U1 (LM324 IC). Be sure that the identifying mark on the IC is upward, near the .1 Mylar Capacitor location. Double check that it is installed properly then solder all 14 leads and clip.

( ) Install U2 (LM340 5V Regulator). Be careful as this regulator is the same size as the transistors. Double check the overlay so that you are sure you installed it correctly. The bottom of the regulator should be about 3/16" from the PC board and the flat side should be as shown. Now solder and clip.

( ) Install and solder transistors Q2 through Q5. Be sure the flat sides are positioned properly and the bottoms of the transistors are about 3/16" from the PC board.

( ) Install and solder the vertical resistors. (R12, R18, R19,R20, and R23)

( ) Install and solder C1 and C3. (.1 mf Mylar caps, 104K). Be sure they are down as far as possible on the PC board.

( ) Install and solder C5. (.01 mf Mylar cap)

( ) Install and solder C2. (.001 mf Disc cap, .001P)

( ) Install and solder C4. (220 pf Disc cap, 221K)

( ) Install and solder C6. (4.7 mf Tantalum cap) Be certain the (+) marking on the capacitor body is installed in the hole adjacent to pin 8 of the IC (the lowermost pin).

( ) Install and solder C7 and C8 (4.7 mf Electrolytic caps) adjacent to the LM340. The negative lead of each cap should be toward the outside edge of the PC board.

( ) Install and solder R14 (5K Vertical Trimpot). Try to keep it as perpendicular to the PC board as possible.

( ) Prepare each end of all the wires by stripping off 1/8" of the insulation, twisting the strands together, and applying a small bit of solder to "tin" the wire.

( ) Referring to Figure 1, install and solder the 6" Black wire into the PC board.

( ) Repeat for the 6" Red wire, ( ) the 4" Brown wire, ( ) the 3" Orange wire, ( ) the 6" Green wire, ( ) the 6" Yellow wire, ( ) the 6" Blue wire, ( ) and the 6" White wire.

( ) Clean the bottom of the board with alcohol and an old toothbrush. Carefully inspect for missed joints, solder bridges, and cold solder joints. Check again for misplaced components...now is the time to correct all errors. Note that Q1, the Photo-transistor has not been installed yet. It will be installed later.

( ) Pass the wires through the hole in the PC board.

( ) Temporarily mount the two "L" brackets to the PC board with the two 4-40 X 1/8" screws. The screw heads are on the component side of the board and they screw into the threaded portion of the "L" bracket on the other side of the board...position the bend on the edge with the rest of the bracket going away from the board. Refer to Figure 2 for help. Snug up the screws.

( ) Set the board on edge and check that both brackets are close to 90 degrees in relation to the board. If not, remove one or both of the brackets and correct with a pair of pliers. If this step is not done, it is possible to tear one of the circuit lands when the board is installed due to warpage. Now check that both brackets and the edge of the board are even and re-tighten the screws.

( ) Refer to Figure 2 for the following steps.

( ) Install the SW1(SW018) in the case using two 2-56 X 3/16" Flat Head screws and nuts, while capturing the small solder lug between the switch and the nut. Be sure to put a 90 degree bend in the solder lug before installation. Tighten securely.
Make sure the screws are level or below the outer surface of the front of the case. If not, file or trim as necessary to accomplish this.

( ) Remove the backing from the Tachmaster II label and carefully apply to the front of the case, centering the rectangular cutout in the case for the switch in the middle of the rectangular hole in the label. Note that the label covers the switch screws and that the lower edge of the meter will overlap the label when it is installed.

( ) Install SW2 (SW010) into the 1/4" case hole (marked "PUSH ON" on label) in the following sequence: 7mm Nut on switch...switch in case...7mm Washer...7mm final securing nut (see Fig.3).

( ) If a small wire is between the meter terminals, remove and discard it. Slip the meter into the front of the case and mount it by using only two of the mounting nuts and washers threaded onto the posts nearest the switch. Do not tighten. Look at the front of the case and make sure the meter isn't upside down.

( ) Install the battery bracket in the bottom of the case using 2-56 X 3/16" Flat Head screws and nuts. Tighten securely.

( ) Install the rubber grommet in the small round opening in the top of the case. Wetting the grommet will aid insertion.

( ) Install but DO NOT SOLDER Q1 (Photo-transistor) in the PC board. Make sure the small tab on the body is oriented as shown in Fig. 1, the Overlay drawing. DO NOT SOLDER YET.

( ) Mount the PC board in the case by slipping the angle brackets down over the meter posts. Secure the board in the case by threading the remaining nuts and washers onto the posts. Use a small needle nosed pliers to tighten all four meter mounting nuts.

( ) Now wet the end of Q1, the Photo-transistor, and carefully insert it into the grommet in the top of the case. Push it in until there is just enough lead left protruding through the PC board to solder (about 1/16").
( ) Carefully solder the three Photo-transitor leads to the PC board while everything is installed in the case.

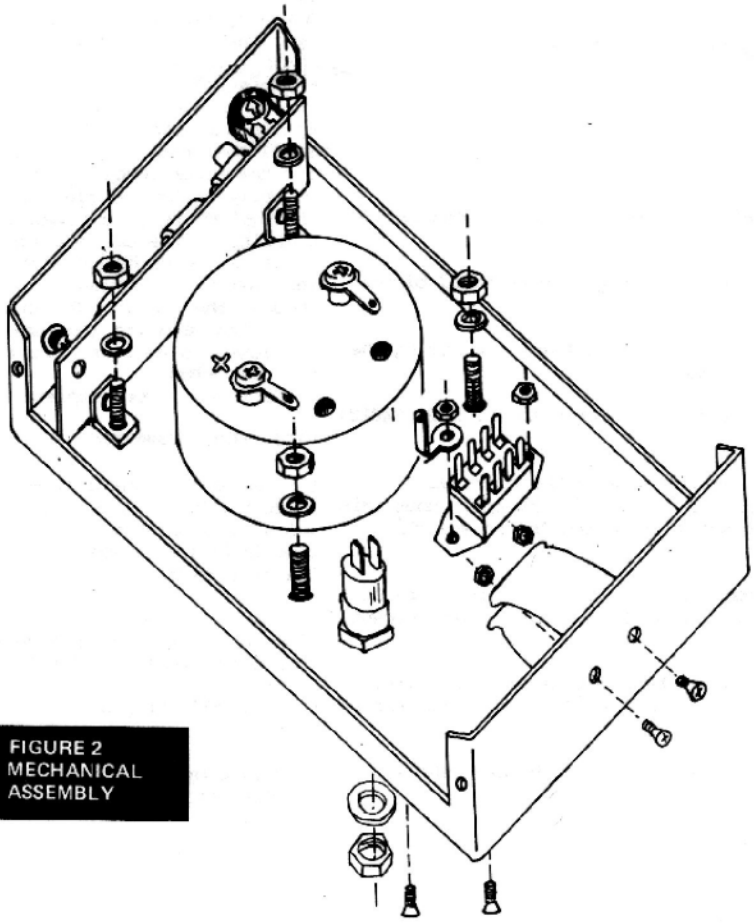

FIGURE 2
MECHANICAL
ASSEMBLY

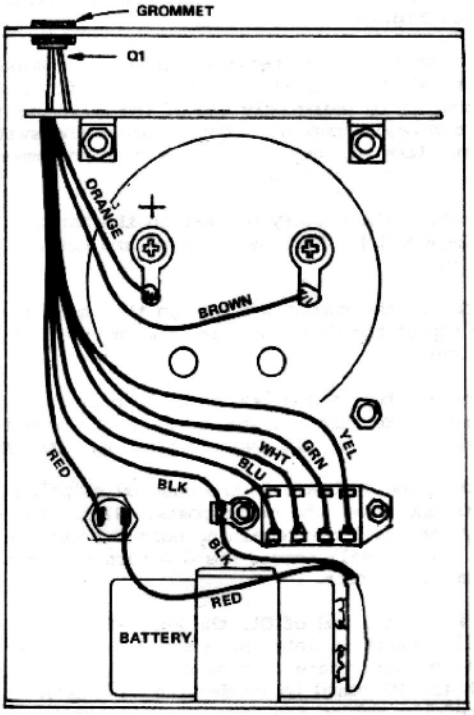


FIGURE 3
WIRING DIAGRAM

**V. FINAL WIRING**

( ) Solder the orange wire to the positive (+) terminal of the meter.

( ) Solder the brown wire to the negative terminal of the meter.

( ) Solder the green, blue, yellow, and white wires to the switch terminals as indicated (Fig.4)

( ) Solder the 6" red wire from the board to the SW2 (SW010) terminal indicated.

( ) Strip another 1/8" insulation from the black wire coming from the board and make a loop in the end. Hook this loop onto the solder lug which is bolted to the switch. Don't solder yet.

( ) Strip 1/8" insulation from the end of the red wire on the battery snap and tin. Repeat for the black wire except strip 1/4" off.

( ) Bend a loop in the end of the black battery snap wire and hook it to the solder lug. Now solder both black wires to the lug.

( ) Solder the red battery snap wire to the SW2 (SW010) terminal indicated.

**VI. CHECKOUT**

In order to check out the Tachmaster II, all that is needed is a fresh 9V Transistor battery, preferably the alkaline type. Snap the clip onto the battery and slip the battery into its bracket.

While you're inside with flourescent lights on, push the ON switch; the meter needle should deflect to some point on the scale. Moving the switch to the 0-5000 range should produce a higher reading than the 0-25000 range. If so, the unit is working properly. Turn the unit off. If it fails to operate, double check parts placement, solder joints, and wiring. If necessary, refer to the Service section in the "Kit Builder's Hints."

**VII. CALIBRATION**

All that is required to calibrate the Tachmaster II is a small screwdriver and household roomlight.

Use the screwdriver to rotate the 5K Trimpot to the center of its travel.

Set the Tachmaster II flat on a level surface with the meter facing you. Make sure the unit is off and lightly tap the meter face with your finger to make sure the needle is settled. If the needle is not pointing directly at the "0" on the scale, use your screwdriver and carefully rotate the screw that is in the bottom middle of the meter face until the needle is zeroed. Very little rotation is required so use care.

Push the ON switch, selecting the 0-5000 range. Keeping it level (horizontal), point the end with the pick up toward a nearby fluorescent light. Five feet is close enough. In most cases, the unit is more than sensitive enough that pointing directly at a light is not necessary.
Calibration of the unit is accomplished by simply rotating the 5K Trimpot until a reading of 3,600 RPM is achieved. To aid in calibration, the meter face has been printed with small calibration points to mark 3,600. Use the right one for the lower range. Once you are satisfied that you have properly calibrated the unit in the 0-5000 range, switch to the 0-25000 range and note the meter reading. It should be pointing at the calibration mark on the left hand side.

If, after using the unit in the field, you feel that your Tachmaster II's either too sensitive or not sensitive enough, the resistor R4 controls the gain or sensitivity. Raise the value to increase the gain (don't exceed 1.5 Meg) and lower to decrease (don't go beyond 500K). Resistors are not furnished.

Calibration is complete.

**VIII. FINAL ASSEMBLY**

( ) Using electrical tape (not supplied), install a 2" long piece horizontally across the inside of the case back about 1 3/4" down from one end; this end is now the top. This tape is to insure that the meter terminals won't short to the case back.

( ) Slip the case back into place, making sure the tape lines up properly so the meter can't short. Secure the back into place with the #2 self tap screws supplied.

( ) Install the plastic slide switch topper onto the switch lever.

This completes the Tachmaster II construction. Refer to the Operation section for some hints on proper use.

FIGURE 4
TACHMASTER SCHEMATIC

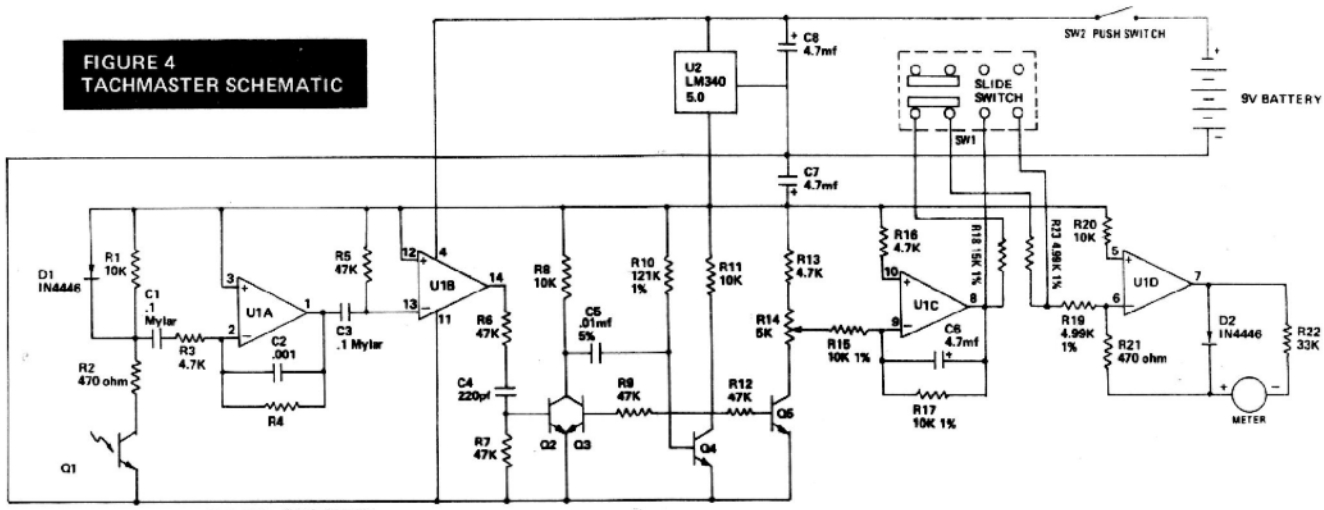


## IX. CIRCUIT DESCRIPTION

The Tachmaster II falls into the category of optical tachometers. What this means is that the RPM of the engine is measured by detecting the light fluctuations caused by sunlight being reflected off of the revolving propeller. To do this electronically, we first start by devising a scheme to detect these reflections and this is done by using a device called a Photo-transistor. For those of you who are not electronically inclined let's take a moment to briefly explain the principal of how any transistor works, and how it applies in our application of detecting these light reflections. Any transistor operates in a fashion comparable to that of an ordinary light dimmer in your home. When you turn the knob of the dimmer, you change the intensity of the light in the room. In a transistor you change the ability of its emitter-collector junction to conduct current by changing the amount of current injected into its base. We control the transistor at its base, as we control the light dimmer with a knob. These are the three terms (base, emmitter, and collector) associated with the typical three leads protruding from the transistors body. The ratio of how much current the emitter-collector junction carries versus the injected base current is called Gain. If we defined the Gain of a particular transistor to be 100, then if we inject 1 ma of current into the base, then the current flowing in the emitter-collector junction would be 100 ma, under proper conditions. The ability of a photo-transistor to conduct current is altered so that instead of injecting electrical current into the base, we use light directed straight onto the "chip" which is the heart of the transistor. You can see this chip by looking into the top of the photo-transistor. Therefore, by changing the intensity of the light falling on the chip we can change its ability to conduct current. This provides an excellent scheme of detecting the reflected light off of our propellers. While our human sight system only detects a transparent disc as the propeller revolves, the photo-transistor reacts with a change in emitter-collector current each time a propeller blade passes in front of it, due to the change in light intensity. This current change is very small and must be amplified in order to reach a usable amount which can be used by the rest of the circuitry to decide whether the prop blade is in front of the photo-transistor or not. This is accomplished by one of the four operational amplifiers in the LM324. The small light fluctuations detected are amplified about 250 times by this amp. The output is fed directly to the second amplifier connected as a comparator. This amp compares a voltage present on one input to the voltage on the other. One of the inputs is tied to the 5.0 volt reference/supply line. Therefore, if the other input should rise above or fall below this voltage the output of the amplifier will change accordingly. In this manner, we can make a very decisive decision whether or not the propeller blade is in front of the photo-transistor or not. Also in the scheme, we have decided that for every two passes of the prop blade we will count them as only one, so that the rest of the circuitry is not fooled into doubling the actual RPM. This second decision making amp then fires a mono-stable multivibrator which produces one output pulse of about 800 micro-seconds for every revolution of the prop. This circuitry is composed of Q2, 3, and 4, and the associated components of resistors and capacitors. The third operational amplifier is connected to produce an output voltage which is an average of the number of pulses it receives from the mono-stable multivibrator. This voltage when flowing through the two 1% resistors (range select) appears as a definite current flowing into the fourth op amp. This amp drives the meter with current proportional to the current flowing through the precision resistors. The end result is a meter reading that is deadly accurate in respect to the acual RPM.

Box 511, Higginsville, Mo. 64037 (816) 584-7121

# ACE R/C, Inc.

# Pro Line Electronics

SAVE FOR FUTURE REFERENCE

7:30 a.m. to 4:00 p.m.,
Monday through Friday

BOX 511, 116 W. 19th ST., HIGGINSVILLE, MO. 64037 816 584 7121

## SERVICE POLICIES, PROCEDURES, & PRICES

EFFECTIVE: 1/85

### GENERAL (ACE & PROLINE)

If it becomes necessary to return your electronic unit for repair, follow these procedures to assure the fastest and best service possible.

First, completely remove your system from the plane. Remove all servo arms and rubber grommets, remove from any trays and foam padding materials.

Fully charge all batteries (if possible) and don't forget to send along the charger. Unless you are 100% sure a problem is in only one component (servo, battery, transmitter, etc.) send the whole system! Repeat, send the whole system! Completely separate all components from one another and pack your system well in a sturdy carton.

Now comes your most important task. Sit down and write a thorough letter telling exactly what you think the problems are. If your plane crashed, tell exactly how it happened. Did one or more functions go dead or give unwanted control action?

In short, the quality of service you receive may be directly related to the amount of information you send to the technician! Nothing is worse for a tech than to get a radio for service with a note that simply says (Don't work!"), or worse, no note at all.

Also, if your system is still in warranty, be sure to send along "proof of purchase date" such as your receipt, etc. Put the letter in an easily found place and enclose a full return address inside the package before sealing.

Ship the radio UPS or Parcel Post. Insure it for its value. UPS is preferred but if you do ship Parcel Post, definitely insure it so it can be traced in case of loss!

When you receive the repaired unit back-- Carefully unpack it, hook up all components and check operation. Perform a range check. Does it seem to be working properly? If not, this is the time to contact the tech with a gripe, not after it has planted another plane! If you have an old plane, it's best to put the radio in it for a few test flights. Only when you are 100% sure the radio is working properly would you put it in your No. 1 plane.

### WARRANTY

ACE (Assembled Units)

All assembled units are warranted for 90 days from the date of purchase against defects in parts or workmanship. This does not include misuse, abuse, or crash damage. A $2 handling fee is charged for each unit requiring repair.

If the unit is out of the warranty period or has suffered damage as a result of a crash or misuse, a labor fee plus parts and postage is charged according to "Labor Charges."

ACE (Kits)

If upon completion, your Ace kit doesn't operate properly, first consult the troubleshooting section included with the kit. If you can't satisfactorily repair the unit yourself, it will be necessary to send it in for repair.

If your unit has failed to operate due to a defective component, and through no fault of yours, we will repair it free and charge $2.00 handling on each device requiring service.

If the problem is traced to a building error, failure to follow instructions, misuse, abuse or crash damage, you will be charged labor plus parts and return postage according to "Labor Charges".

If a unit is not completely assembled, a fee or $15 per hour will be charged to complete the kit. This is done on a time available basis only, so a delay can be anticipated.

NO refunds will be issued on a kit where construction has begun!

PROLINE

All ProLine units manufactured by Ace R/C are warranteed against defects in material and workmanship for 6 months from date of purchase. This does not include damage caused by misuse or crash damage. Proof of purchase is required. A $2 handling fee is charged for each device requiring service.

### LABOR CHARGES (Parts & Postage are Added)

Out of Warrantee Charges: We will repair Ace R/C and ProLine electronic units charging the current per hour labor rate plus parts and return postage. The labor charge will not exceed 20% of the manufacturer's current retail price for the item. A $3 minimum labor billing will be assessed for each item requiring repair.

### CONVERSION TO NEW CHANNELS

We will convert units to a new channel at the following rates Ace or ProLine Transmitter RF Deck--$10. Silver Seven Receiver--$12.50. ProLine Receiver--$12.50. Digital or Pulse Commander Receiver--NOT RECOMMENDED; Write for details.

### PAYMENT

Payment may be made in the form of a check or by Mastercard/Visa. If no payment is included with the service job, we will return it C.O.D. unless otherwise instructed. Open account billing will be extended to only approved dealers.

SEE OTHER SIDE FOR

LISTING OF SERVICE CENTERS

# ACE R/C, Inc. / Pro Line Electronics

## AUTHORIZED SERVICE CENTERS

* Ace Only Service Centers
**ProLine Only Service Centers

### ALABAMA

Fud's Ace Radio
5405 Quail Run N.
Theordore, AL 36582
Fred Fihe
(205) 653-5419

### ARIZONA

R/C Service
Fred Morgan
Bx 1474J Black Canyn SGIII. 103
36220 N. 10 St.
Phoenix, AR 85029
(602) 582-9454

### CALIFORNIA

Authorized R/C Service
941 North Main St.
Orange, CA 92667
Don McCarthy
(714) 639-8886

Electronic Model Systems, West
22483 Mission Hills Lane
Yorba Linda, CA 92686
Mark Schwing
(714) 777-1326

GSP Products of Sacramento
2238 Rogue River Drive
Sacramento, CA 95826
George Steiner
(916) 362-1962

### FLORIDA

Radio South
43 W. Nine Mile Rd.
Pensacola, FL 32514
Tony Stilman
(904) 478-6745

Wollitz Radio Control
8996 Barco Lane
Jacksonville, FL 32222
Calvin Wollitz
(904) 771-0613

### GEORGIA

Kraft Atlanta
2303 Wallace Dr.
Chamblee, GA 30341
Don Rowe
(404) 458-4127

### ILLINOIS

R/C Avionics
Ray Konieczny
17 Andy Ct.
Plainfield, IL 60544
(815) 436-7606

Quad City Avionics
C. E. Systems
1816 21st. St. Apt 6
Rock Island, IL. 61201
Donald Breivogel
(309) 788-4004

### INDIANA

Mendy's R/C Radio Repair
263 High St. P.O. Box 404
Roanoke, IN 46783
Jerry Mendenhall
(219) 672-3839

Model Avionics
6525 Tanbark Trail
Ft. Wayne, IN 46815
John Strawbridge
(219) 485—4502

### IOWA

Gemini Electronics
1221 S.W. Broad
Des Moines, IA 50315
Brian Gochnaur
(515) 280-1372

### KANSAS

Finley's Hobbies**
6540 E. Central
Wichita, KS 67206
James T. Finley
(316) 683-4221

### MICHIGAN

Kraft Midwest
117 E. Main St.
Upper Level
Northville, MI. 48167
Pete Waters
(313) 348-0085

### MISSOURI

Ace Service Center
Box 511 203 W. 19th St.
Higginsville, MO 64037
(816) 584-7121

C.W. Reed
5408 Woodson Rd.
Raytown, MO 64133
Charley Reed
(816) 353-8396

### NEW JERSEY

John Deneke
526 Doremus Ave.
Glen Rock, NJ 07452
(201) 445-0361

### NEW MEXICO

MATT'S R/C
1175 Chiquitos Rd.
Bosque Farms, NM 87068
C.W. Matthews
(505) 869-2370

### NEW YORK

Lon's R/C Service
2062 Rabbit Lane
Phoenix, NY 13135
Lon Sauter
(315) 695-2448

### NORTH CAROLINA

Bradford Electronics
Rt. 1 Box 44D
Bethal-Southfork Rd.
Snow Camp, NC 27349
Brad Booth

### OHIO

R/C Electronic Services
1685 Beckwith Drive
Hudson, OH 44236
Milt Erb
(216) 655-2278

### TENNESEE

Hobby Radio
322 S. Gallatin Rd.
Madison, TN 37115
Ed Brannan
(615) 868-6811

### TEXAS

H & N Electronics
3422 Olton Rd.
Plainview, TX
Reggie Holland
(806) 293-3626

Ace Service Center
David Bowen*
1607 Jane
Pasadena, TX 77502
(713) 472-0077

Digital Control Repair
10044 Goliad
ElPaso, TX 79924
Daryl Cooley
(915) 755-0202

R/C Specialties
2026 Snowmass Lane
Garland, TX 75042
David Hyde
Work; (214) 238-8111 Ext. 214
Home; (214) 495-5969 After 4:30 PM

### WASHINGTON

Anything R/C
W3029 Hoffman
Spokane, WA 99205
Dick Carson
(509) 327-4579

### CANADA

Bob's Hobbies**
1 Burnham Ct.
Petersborough, Ontario
Canada K9H 1B2
Bob Stevens
(705) 743-4696

Don's Radio Control Systems
11392- 74th Avenue
Delta, B.C., Canada V4C 1E1
Donald J. Wadella
(604) 596-3289

Dundas Hobby Supply
R.R. 1 Troy, Ontario
Canada L0R 2B0
Scotty Law
(416) 627-1637

R.K. Specialties
406 Prospect Drive SW
Medicine Hat, Alberta, Canada T1A 4C1
Ridley Shaw
(403) 526-5232

### SOUTH AFRICA

Mastercraft
4 Linden Road Chiselhurst Ext.
East London 5201
SOUTH AFRICA
Bob Masters

### GUATEMALA

Julio E. Quevedo
Clinicas Del Centro Medico
6 Ave. 3-69. Zona 10
Guatemala City
Guatemala 17214