INSTRUCTIONS FOR

OPERATION AND INSTALLATION

CITIZEN-SHIP TYPE PLR "27"

PRINTED CIRCUIT RECEIVER

CITIZEN-SHIP RADIO CORPORATION
820 EAST 64th STREET
INDIANAPOLIS, INDIANA

INDEX FOR RECEIVER INSTRUCTIONS

INSTALLATION AND OPERATION OF MODEL PLR CITIZEN-SHIP RECEIVER.

1.0 FREQUENCY OF RECEIVER:-
Your Citizen-Ship Type PLR "27" Receiver is designed to operate on the "examination free" 27.255 megacycle band in conjunction with the Citizen-Ship "27" Transmitters. (See transmitter instructions packed with that unit.)

2.0 GENERAL REQUIREMENTS:-
The PLR "27" receiver has to have a wire antenna which requires that the receiver be tuned to accommodate the length of antenna installed in the plane or ship. This is best done after complete installation and requires the use of a milliameter that will read from O to 1.5 milliamperes. (See enclosed BROCHURE describing special Citizen-Ship meter for that purpose.)

3.0 MOUNTING: -

3.1 The "crash-proof" mounting (Figure 2) is a method of mounting the set so that the components are stressed to best resist the shock of a crash. In Fig. 2 the receiver is shown glued directly to the sponge rubber. Rubber bands from the plywood mount around the receiver at each end can be used in place of the glue which allows the receiver to be more readily removed. Also a 1/4 to 3/8" thick soft balsa sheet relieved to fit the soldered back of the receiver and placed between the sponge and the receiver will provide additional support.

3.2 A second method of mounting is by means of #16 rubber bands through the loops of the Fahnestock clips on both ends of the base with the relay up. (Fig. 3). Cement a piece of sponge rubber on the bulkhead in front and back of the receiver. In case of a crash this will cushion and protect the receiver.

3.3 Since it is necessary to tune the receiver after installation it is recommended that an access space be provided on top of the fuselage. The easiest solution is to have the space under the center of the wing open. After tuning the wing may be put in place.

3.4 Batteries may be mounted anywhere to provide balance. Be sure to mount batteries in front of receiver if crash-proof mounting (Fig. 2) is used. It is convenient to mount them on the front of the plywood board.

3.5 Wire and metal parts such as batteries should be kept about an inch away from the tuning coils S & T, but aside from this nothing else is critical.

4.0 RECOMMENDED BATTERIES:-

4.1 Voltages required are 1-1/2 on the filament or "A" batteries and 60 or 67-1/2 on the plate or "B" batteries.

4.2 Recommended filament batteries are 2 pen cells in parallel.

4.3 Plate or "B" batteries recommended:

(1) Eveready #457 or Burgess K45, or equivalent, 67-1/2 Volts - 7-1/2 oz.

(2) Three hearing aid 22-1/2 Volt batteries in series giving 67-1/2 volts There are several different styles and sizes of these available.

(3) Two Burgess hearing aid Type V2OE batteries or equivalent, in series giving 60 volts - 3 oz.

4.4 We strongly recommend the heavier single 67-1/2 Volt battery to give long life and reliability. The PLR "27" idles at about 1-1/2 milliamps and decreases its plate current when receiving a signal. This constant drain on the hearing aid batteries lowers their voltage and decreases the sensitivity of the receiver as well as lowering the idling current to a value that approaches the operating current of the relay (See Par. 10 on BATTERY LIFE).

5.0 SOURCES OF BATTERIES:-
Many hobby shops carry a complete line of batteries for Radio Control. If not available at your local hobby shop, pen cells may be obtained in any drug or hardware store. The 67-1/2 Volt Eveready #457, or equivalent, may be obtained at any radio store or radio parts jobber. The hearing aid batteries are stocked by radio parts jobbers or hearing aid distributors.

6.0 WIRING THE RECEIVER:-

6.1 After provision has been made for mounting the receiver in the fuselage, set the batteries around to obtain the desired balance. (The assumption is made that the modeler has some knowledge of free flight. Plane should balance at 50% of chord for a lifting stabilizer and 33-1/3 to 40% with a non-lift stabilizer.) It is recommended that two pen cells for filament supply and two other pen cells for the escapement be mounted in battery boxes for ready changeability. The 67-1/2 Volt "B" battery has glove fastener clips marked + and -. If hearing aid "B" batteries are used, some box or clip may be made to hold them, or they may be wired in series.

6.2 Fig. 5 shows the schematic wiring diagram of the batteries and receiver. Flexible wire with some slack should go to the Fahnestock clips. Several wires (--A, --B, and -- Escapement) all return to the Fahnestock clip marked "Common" and since it is inconvenient to put more than one wire in a clip, these should be soldered together at another point as shown in the schematic.

6.3 The schematic shows a DOUBLE POLE SINGLE THROW SWITCH to shut off the filament and simultaneously open the escapement lead. This is necessary with the "27" receiver because the normally closed contact actuates the escapement when the plate current DECREASES with signal which also occurs when the filament is turned off.

6.4 A closed circuit jack which will accept a phone plug is shown in series with the "Plus B" lead. This is for the purpose of inserting a meter to tune the receiver. This jack and plug are included with our Citizen-Ship Test Meter. (See enclosed BROCHURE).

7.0 ANTENNAE:-

7.1 Several arrangements of antennae are possible. A stiff steel wire about 18" long may be cemented vertically at any convenient point and a lead run to the antenna terminal. A wire may be stretched from the back edge of the wing to the top of the fin. It may be possible to use either too short or too long an antenna to allow proper tuning of the receiver. This is discussed in Paragraph 8.0 on TUNING. The longer the antenna the more pick-up of signal is obtained, but the receiver will operate as far away as the control is useful with only an 18" vertical antenna and its associated lead-in.

7.2 Leave some slack in the antenna lead-in from the antenna to the antenna clip on the receiver so hard landings do not pull this lead out of the clip. The receiver will operate with no antenna when the transmitter is close, but goes out of range at about 100 yards.

8.0 TUNING AND ADJUSTING:-

8.1 Looking at the top of the receiver identify T & S coils. (Fig. 1 and Fig. 2) The T coil adjusts the tuning and the S coil adjusts the sensitivity.

8.2 If the receiver is properly connected, including the antenna, and the filament turned on, the plate current, as read by a meter plugged into the jack (as described in paragraph 6.4) or wired in series with the + B lead, may be anywhere between 0.5 M.A. and 1.5 M.A. plus. If current is off meter scale insert a 500,000 ohm potentiometer or volume control, such as used in a radio set, in the series with + B (Fig. 5) and bring reading on scale. (A simple way to insert the potentiometer is to remove the + B lead from the Fahnestock clip and connect the potentiometer between the lead and the clip.) Turn OUT (Counter-clockwise) the slug marked S, (identify S coil slug Fig. 1 & Fig. 2), until the meter reads a steady maximum.

CAUTION: The following adjustments must be made with a non-metallic screw driver such as fiber or bakelite.

The quench coil core is set at the factory at its most sensitive setting and should not be readjusted.

Turn on the Citizen-Ship "27" Transmitter with antenna plugged in and press the operate button. Turn slug T (identify in Fig. 1 & Fig. 2) in and out until plate current drops. Tune slug T for LOWEST value of plate current that shows a definite valley - i.e. goes through a minimum as the slug is rotated in or out.

8.3 Next turn in (clockwise) slug S until the plate current starts to fall. Back off the screw about 1/2 to 1 turn so the plate current remains steady at its highest value. To better the adjustments you have made, use your FL Transmitter at a distance and again retune. With our LC Transmitter it is possible to remove the antenna and make a close-up tuning check.

8.4 It is possible that if the sensitivity control S is set too close, adjusting the tuning slug T may make the plate current go down and stay down. No minimum valley could be found under this condition. Simply turn out the slug S and proceed as above.

8.5 The varying length of leads used on your meter may affect the sensitivity adjustment S. (It is recommended at this point that relay be set). (See Paragraph 9.0). Remove the meter and turn S in until escapement operates indicating a drop in plate current. Back off about 1 turn and make sure that the escapement always releases when the transmitter is off. If it tends to be "sticky" or stay down, back S off until it operates properly. Backing off too far reduces sensitivity and range.

9.0 RELAY SETTING:-

9.1 The normal maximum idling current of your set is approximately 1-1/2 milliamps. It will be slightly higher with 67-1/2 volt "B". The weakest signal that will operate the receiver triggers the plate current to 0.5 milliamps and strong signals make it go lower.

9.2 The relay is set at the factory to drop out (actuate the escapement) at approximately .85 milliamps and pull in (release the escapement) at 1.2 milliamps. (See Fig. 4).

9.3 These values of relay pull in and drop out can be easily checked by wiring a 500,000 ohm potentiometer or volume control as described in Paragraph 8.2. (Wire in series with + B (Fig. 5). Turn the shaft to insert resistance which decreases plate current and the values may be observed at which the escapement operates.

9.4a If the set is equipped with a Kurman 10,000 ohm relay (See name on armature) and the modeler wishes to readjust it the procedure is as follows: CAUTION: DO NOT ADJUST THE SPRING TENSION. This is factory set for best operation. When the relay is energized (receiver turned on) the armature is pulled toward the pole piece by magnetic force and the contact on the armature hits the top adjustable contact. Turning the top contact (Fig. 1B, Note P) counter-clockwise decreases the value of plate current at which the armature will drop out (thereby actuating the escapement) and vice versa. Backing the top contact out so far that the armature hits the pole piece before it hits the contact would result in a minimum value. Adjust top contact for proper drop-out value. Turning the bottom contact to move up toward the top contact decreases the value of pull-in current (releasing escapement) and vice versa. Adjust bottom contact for proper pull-in value. The less movement allowed to the armature by the contacts, the less difference between the pull-in and drop-out.

9.4b If the set is equipped with a Sigma 4F-8000S Relay and the modeler wishes to readjust it, the procedure is as follows:
This relay has adjustable contacts and adjustable spring tension. (Fig. 1A, note P). When the relay is energized (receiver turned on) and the armature is pulled in by magnetic force, the movable contact on the armature hits the BACK contact.
This BACK contact acts as a stop for the armature. This contact should be set so that when the relay is energized the armature does not hit the pole piece in the coil. There should be .005 gap under this condition.
The FRONT contact operates the escapement. This FRONT contact should then be turned toward the movable contact so about .005 movement is possible. The smaller this gap is the smaller will be the differential between pull-in and drop-out.
The hex screw head on top tightens or loosens the spring on the armature and determines the pull-in setting of the relay. Turn clockwise for higher pull-in, counter clockwise for less.
Do not use a screw driver - obtain a socket wrench that fits the hex.

10.0 BATTERY LIFE:-

10.1 To properly know the voltage of your batteries, it is desirable to have a multimeter that will read 1-1/2 and 67-1/2 Volts for the receiver, and 135 Volts for the transmitter. This meter, also including a 1-1/2 milliameter, is available and especially designed for this application. (See Citizen-Ship Test Meter in enclosed BROCHURE.)

10.2 Decline of the filament voltage has little effect on the maximum value of the plate current until it goes down to 1.1 Volts, but the "B" voltage reduction will lower the maximum plate current until it becomes dangerously close to the operating point of the relay. (THIS WILL LOCK THE SHIP INTO A TURN AND MIGHT CRASH IT.) The relay could be set to operate at lower values closer to the 0.5 or drop out value, but this also might impair reliability and will reduce range.

10.3 It is therefore advisable to replace the "B" battery when the maximum plate current declines to about 1-1/4 m.a. which occurs around 50 Volts of + B.

11.0 TESTING AND FLYING:-

11.1 The above instructions have described not only how to make the radio receiver operate properly, but have mentioned the action of the escapement as a means of telling when the relay properly operates as the result of a signal sent to the receiver.

11.2 If the above instructions have been carefully followed and the transmitter operating properly (see transmitter instructions) every time the operate button on the transmitter is pushed, the escapement should operate ONCE only. If it skips or chatters, do not fly. Check that the plate current is DECREASING as described in 9.1. If this action is correct, check relay setting and finally see that the escapement itself is not skipping or sticking.

11.3 All these checks should be repeated on the ground with THE MOTOR RUNNING. If the receiver is not suspended freely enough, vibration may make the relay chatter, or even vibrate the escapement, and cause it to operate.
Carefully check the T & S coil slugs to see whether they may have a tendency to rotate up or down from excessive vibration. (THIS IS IMPORTANT). If this happens either mount the receiver more loosely or put a drop of model airplane cement at the edge of the slugs and coil form. Be sure not to fill the screw driver slot with glue.

11.4 Practically all models are now using glow or diesel engines, but if ignition is used it may have the same effect as sending a signal from the transmitter - i.e., drive the plate current DOWN and operate the relay and escapement. A suppressor resistor of about 10,000 ohms in the spark plug lead will generally fix this, but it may be necessary to isolate the ignition system from the receiver.

12.0 IF ALL THE ABOVE CHECKS OUT, GO AHEAD AND FLY. HAVE FUN!

WARRANTY

Your CITIZEN-SHIP "27" Type PLR Receiver is warranted by the manufacturer to be free from defects in material and workmanship. However, the tube will not be replaced because of an open filament as factory testing of the sets before shipment indicates the set to be in good operating condition before shipment is made.

Any receiver failing to operate within thirty days after date of purchase will be repaired or replaced free of charge upon being returned to the Factory. This warranty does not apply to failure of operation due to exhausted or improper batteries.

If your receiver is damaged in shipment, you should file a claim with the carrier immediately upon noting the damage.

This warranty does not apply if, in our judgement, the receiver has been tampered with or received abusive treatment beyond that encountered in normal usage.

CITIZEN-SHIP RADIO CORPORATION
820 EAST 64th STREET
INDIANAPOLIS 20, INDIANA

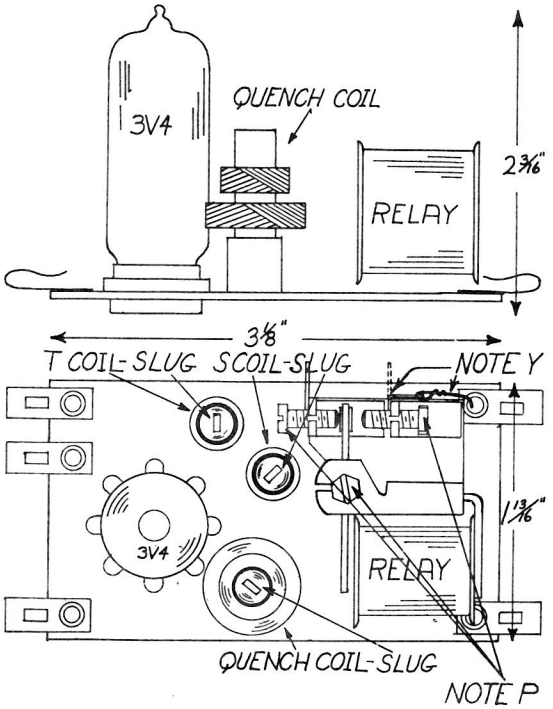

FIG 1A

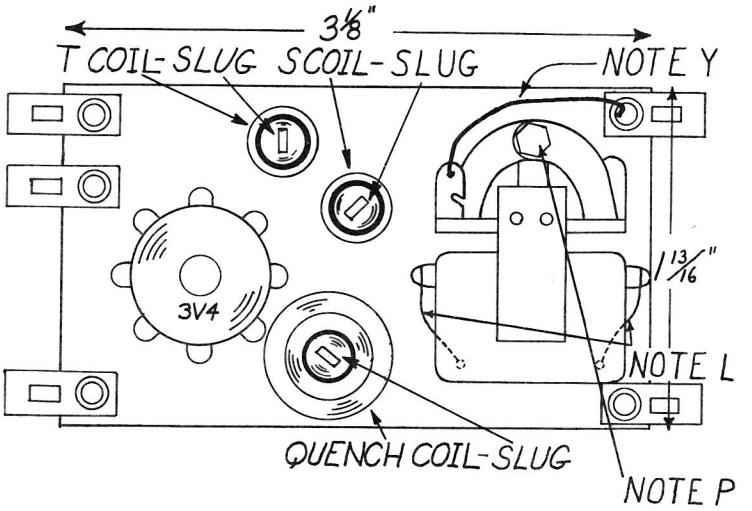

FIG 1B

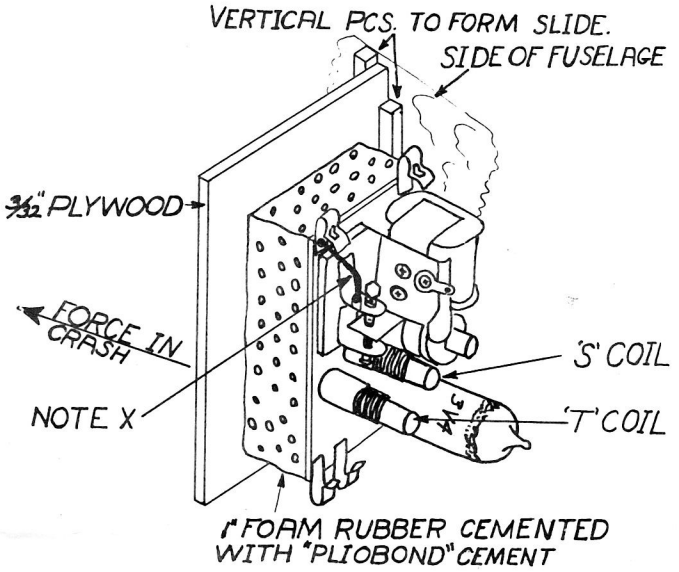

FIG 2

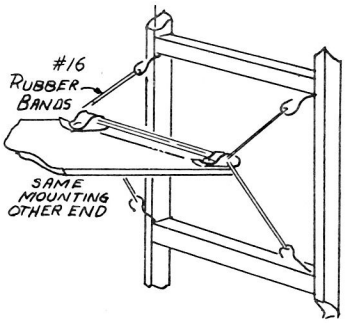

FIG 3

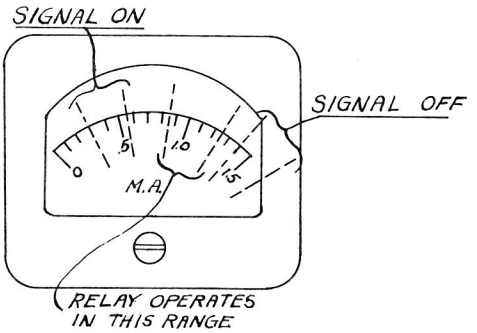

FIG 4

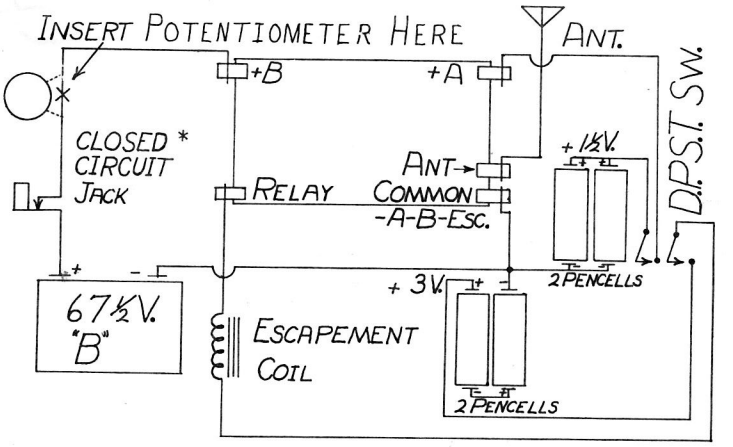

* INCLUDED WITH C/S TEST METER

FIG 5