INSTRUCTIONS FOR OPERATING

CITIZEN-SHIP MODEL UR RECEIVER

CITIZEN-SHIP RADIO CORPORATION
820 East 64th Street
Indianapolis, Indiana

INSTRUCTIONS FOR OPERATING CITIZEN-SHIP MODEL UR RECEIVER

Your Citizen-Ship Model UR Receiver is a completely transistorized midget carrier operated receiver requiring no "A" Battery supply and only a 9 Volt "B" Battery supply at a low idle current. This Receiver was designed to operate on the "examination free" 27mc Band of frequencies in conjunction with the Citizen-Ship FL, FLX, and LC Transmitters. It may also be operated with the Citizen-Ship CTX Transmitter switched to the carrier operating position.

The UR Receiver is not Selective and will not sort out any particular one of the 27mc frequencies. Citizen-Ship Tone Receivers type SSTR & SS-MSR-8 are available for this selective operation.

BATTERY REQUIREMENTS

Since the set is all transistorized, only one 9 Volt battery is required. Two adequate types (sizes) of 9 Volt batteries are currently available.

Eveready Type #216 or Equivalent	Weight 1 1/3 oz.
Burgess Type #PGM or Equivalent	Weight 1 3/4 oz.

These types give adequate life as they are designed for home receiver transistor radios drawing even more current than the UR.

The specifications of RCA Battery Type #VS309 and Eveready #E177 (weight 3/4 oz.) indicate these may also be used but tests indicate they are marginal and are not recommended.

Batteries may be used until voltage reaches 7 Volts. This voltage must be measured with the receiver turned on and a signal being received from the transmitter. Receiver current will then be greatest and battery voltage will be lowest.

ANTENNA

Several arrangements of antennae are possible. A stiff steel wire, .020 - .040 diameter, about 18" long may be mounted vertically at any convenient point and the antenna lead from the receiver soldered directly to this. A wire may be stretched from the receiver to the top of the rudder fin. A total length of 18" to 30" is entirely adequate. Leave some slack in the antenna lead into the receiver, but do not wind this lead in and around other wiring as range might be reduced.

MOUNTING

The Citizen-Ship UR Receiver has two recommended mounting positions, with the printed circuit base Vertical and forward or Horizontal and downward. Vertical mounting is preferred as it gives better crash protection. Sponge rubber or some other shock protection method must be used to secure receiver and eliminate any trouble due to vibration. Ideally the receiver should be completely surrounded on all six sides with sponge rubber. Batteries and receiver must be mounted to give proper balance to the plane but batteries should always be forward of receiver. If Vertical mounting is used it is convenient to mount both receiver and batteries on a removable plywood board.

WIRING

The receiver battery must be wired with polarity exactly as shown in Wiring Diagram (Figure 1). For easy battery removal, a battery clip is supplied to fit Eveready 9 Volt type #216. See Figure 3.

It is recommended that the two batteries for the escapement or servo (3Volt supply in Figure 1) be mounted in battery boxes for ready changeability although all batteries may have leads soldered directly to them. The proper method of connecting two pen cells together for 3 Volts is shown in Figure 4.

Figure 1 shows a Single Pole Single Throw Switch to open the receiver battery power. A switch is not needed for the escapement or servo batteries.

The proper position for insertion of a meter is shown in Figure 1. A closed circuit meter jack may or may not be installed in the plane or boat for easy insertion of a meter to check the receiver.

TUNING AND ADJUSTING

After the previous complete factory testing and tuning of your set, there is only a need to check it or slightly readjust the tuning slug. A change of over 1/2 turn in either direction should never be necessary. Tuning must be done with the cover of the set installed. Use a tuning wand of all bakelite or a 1/8 wood dowel shaped to a wedge. Never use a tuning wand with a metal tip for this adjustment.

For complete checking, insert a O - 25 MA or higher range meter in the Black lead (See Wiring Diagram). Idle current should be approximately 3 - 6 MA with set on and may not be completely steady. Turn on transmitter and push operate switch. Receiver current will rise to 10 - 18 MA and relay will pull in. The tuning adjustment will be very broad with transmitter close by and fine tuning must be done with transmitter removed to a distant spot. The greater the distance between transmitter and receiver when this adjustment is made, the more accurate the tuning will be.

Accurate tuning can also be accomplished by another method at a close up distance. Leave the transmitter switch off and bring transmitter antenna very close to receiver antenna. The relay should pull in and the escapement operate. Move tuning slug back and forth slightly until turned off transmitter will operate receiver at greatest distance. This distance will normally be limited to 12 - 18"

OPERATION OF SERVOS AND MOTOR CONTROL UNITS

The wiring of Servos and Motor Speed Control units varies so greatly that the wiring for them is not shown. However, a diagram showing nomenclature of a relay is shown. (See Figure 2). All Citizen-Ship Servos and the Citizen-Ship Motor Speed Control unit have their own complete wiring diagram showing how to connect them to a relay.

The Red wire in your Receiver is connected to the Common or Relay Armature contact. This wire also brings the plus 9 Volts to the receiver.

The Blue wire is connected to the Normally Closed contact, and is not used in Figure 1.

The Yellow wire is connected to the Normally open contact.

Remember, a relay is nothing but a Double Pole Single Throw-Spring Return Switch.

UR WIRING DIAGRAMS

FIG. 1

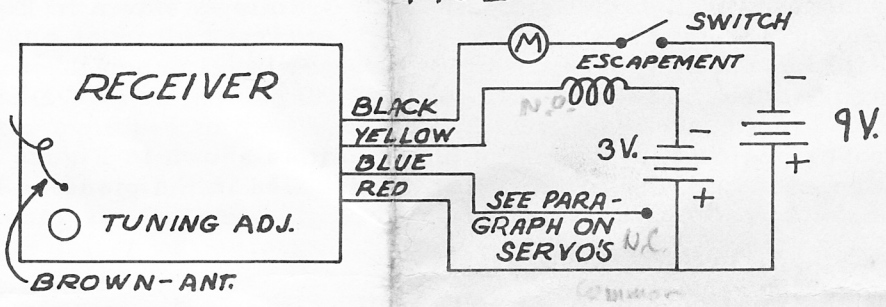

FIG. 2

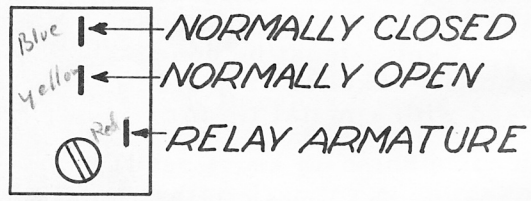

RELAY CONTACTS

FIG. 3

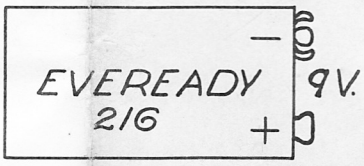

RECEIVER BATT.

FIG. 4

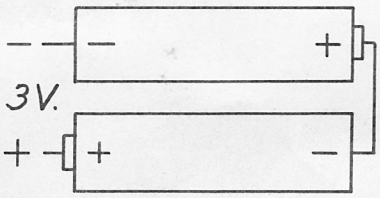

ESCP. BATT.

FIG. 5
CIRCUIT DIAGRAM

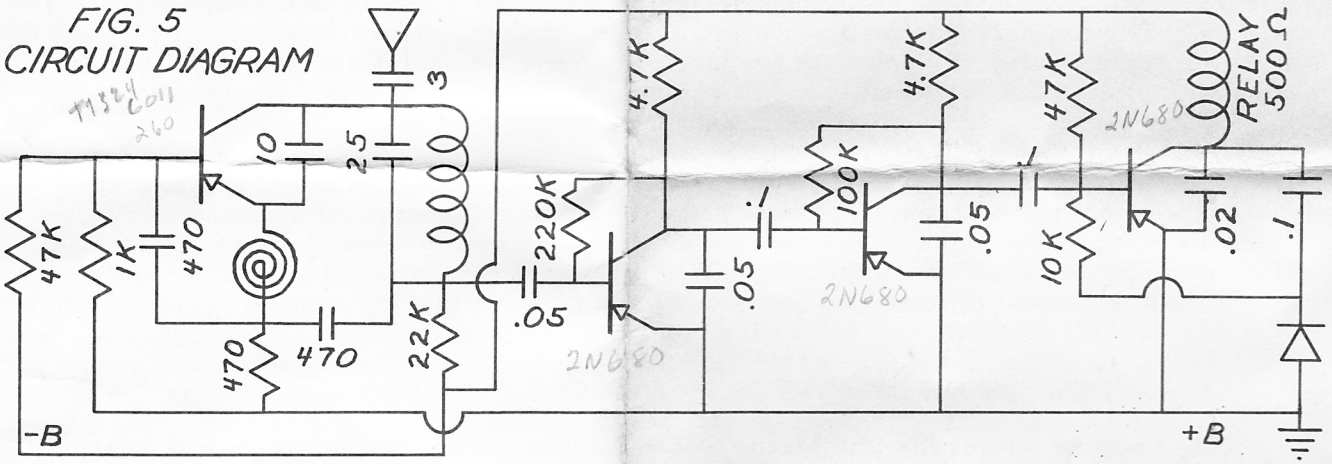

WARRANTY

Your CITIZEN-SHIP Model UR Receiver is warranted by the manufacturer to be free from defects in material and workmanship. However, the transistors are known to be operative from testing of the set and we cannot guarantee them against damage caused by incorrect voltage.

Any receiver failing to operate within 30 days after date of purchase will be repaired or replaced free of charge upon being returned to the factory. This warranty does not apply to failure of operation due to exhausted or improper batteries.

If your receiver is damaged in shipment, you should file a claim with the carrier immediately upon noting the damage.

This warranty does not apply if, in our judgement, the receiver has been tampered with or received abusive treatment beyond that encountered in normal usage.

CITIZEN-SHIP RADIO CORPORATION
820 East 64th Street
Indianapolis, Indiana