			TRANSMITTERS			
	SCHE	MATICS	PARTS	LOCATION		
	ENCODER	RF	ENCODER	RF	PARTS LISTS	WAVE FORMS
LOG I (64 - 65)						
LOG II (65-67)	B-504	B-504				
LOG III (68 - 70)	B-504	B-504		B-633	PL-B-633	B-538
DIGI - GHOST (68)	B-519	B-519				
XL III (68)	B-504	B-504				
PRO SERIES (69)	B-504	B-504	B-635	B-633	PL-B-635 PL-B-633	
PRO SERIES (70 - 71)	B-586	B-588	B-635	B-633	PL-B-635 PL-B-633	W-C-1018
LOGICTROL (70)	B-504	B-504	B-635	B-633	PL-B-635 PL-B-633	W-C-1018
CHAMPION (70)	B-588	B-588	B-635	B-633	PL-B-635 PL-B-633	W-C-1018
LOGICTROL (71)	B-588	B-588	B-635	B-633	PL-B-635 PL-B-633	W-C-1018
CHAMPION (71)	B-588	B-588	B-635	B-633	PL-B-635 PL-B-633	W-C-1018
LRB 2 - 3 (71 - 73)	B-584	B-584	A-169	B-633	PL-A-124 PL-B-633	W-C-1018
CHAMPION (72)	B-588	B-588	B-635	B-633	PL-B-635 PL-B-633	W-C-1018
SUPER PRO (72)	B-588	B-588	B-635	B-633	PL-B-635 PL-B-633	W-C-1018
Hobby Lobby 4 5 6	B-588	B-588	B-635	B-633		
CHAMPION (73)	C-1018	C-1018	B-654	B-656	PL-B-654 PL-B-656	W-C-1018
SUPER PRO (73)	C-1018	C-1018	B-654	B656	PL-B-654 PL-B-656	W-C-1018
LRB 3 - 4 (74 - 75)	B-584	B-584	B-671	B-633	PL-B-671 PL-B-633	W-C-1018
CHAMPION (74 - 75)	C-1018	C-1018	B-665 B-667	B-656	PL-B-665 PL-B-667 PL-B-656	W-C-1018
SUPER PRO (74 - 75)	C-1018	C-1018	B-668	B-656	PL-B-668 PL-B-656	W-C-1018
LRB 3 - 5 (75)	B-584	B-584	B-680	B-633	PL-B-680 PL-B-633	W-C-1018
RANGER (75)	B-584	B-584	B-666	B-666	PL-B-666	W-C-1018
LRB 3 - 5 (76 - 77)	B-681	B-681	B-680	B-633	PL-B-680 PL-B-633	W-C-1018
RANGER (76 - 77)	B-682	B-682	B-666	B-666	PL-B-666	W-C-1018
Hobby Lobby 3	B-682	B-682	B-666	B-666		
CHAMPION (76 - 77)	B-681	B-681	B-680	B-633	PL-B-680 PL-B-633	W-C-1018
SUPER PRO (76 - 77)	B-683	B-683	B-668	B-656	PL-B-668 PL-B-656	W-C-1018
NIMBUS 4 (77)	B-681	B-681	B-680	B-633	PL-B-680 PL-B-633	W-C-1018
Red = do not have			Orange = very poor		Green = Good copy	

EK CUSTOMER SERVICE BULLETIN

DATE: MARCH 19, 1976
SUBJECT: Modification for "cycler" use.
TO: All EK Products users.

Due to increasing numbers of requests, we present the following modifications necessary to adapt your system to most of the current battery cyclers. But first a word on use of these devices. From our experience of twelve years use of rechargable batteries in EK radio systems there is little or no chance for a "memory" to develop in this type of battery cell in normal R/C useage. Refer to the Radio Spectrum column of December '75 issue of R/C Modeler magazine for comments concerning "memory." Most of the battery types used by EK are not of the "high charge rate" type and therefore fast rate charger systems are not recommended. Doing so may void the warranty on your radio.

The following modifications are for transmitters using the 3-pin DC charge connector for external connections to your cycler. It is recommended for all soldering that you use a low wattage (25-35W) soldering iron with a small tip and a good quality 60/40 solder. Never use a soldering gun. We will first cover the conversion for systems prior to 1975 using the high voltage internal charge circuit. A simple jumper wire as illustrated below is all that is needed in the transmitter. It

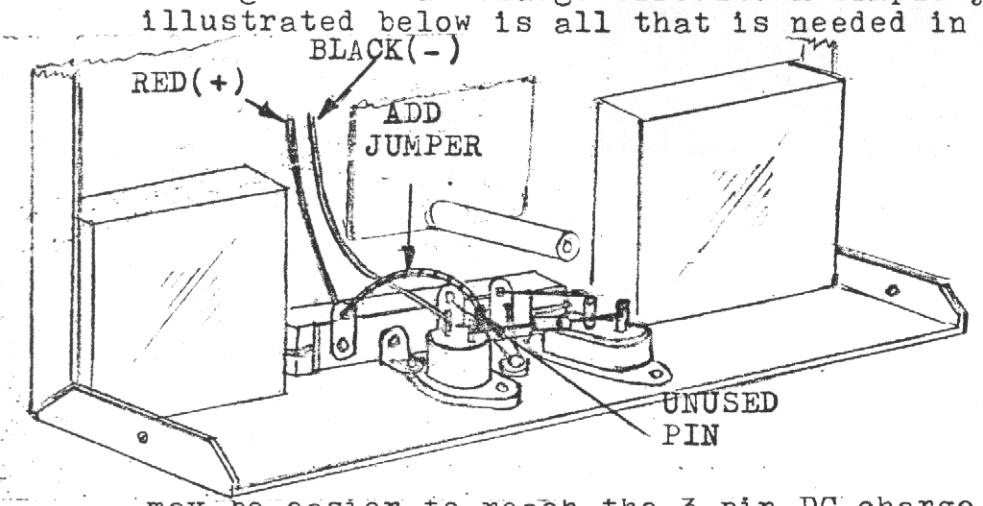

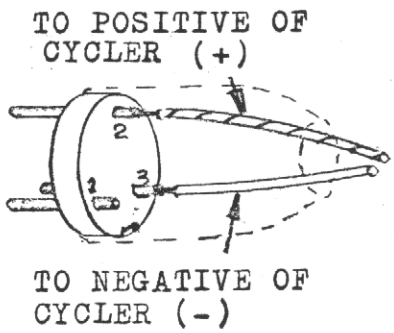

may be easier to reach the 3-pin DC charge connector and the terminal strip by removing the three #2 screws from the encoder circuit board so it may be flipped upward out of the way, being careful not to move any of the small trim potentiometers. Now as shown above, attach your cycler leads to EK's 3-pin plug, part no. 202-1020, observing polarity, and you now have completed the transmitter conversion.

If your system is a 1975 model or later which uses the low voltage transformer isolated charger circuit, again a jumper is all that is required for the modification. Notice that the 3-pin mating connector, part no. 202-1020, is not connected the same to your cycler as in the previous hookup.

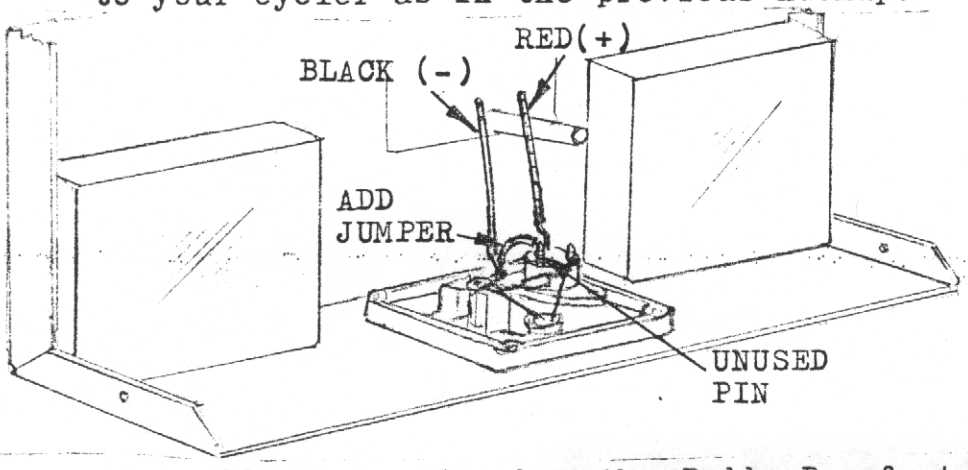

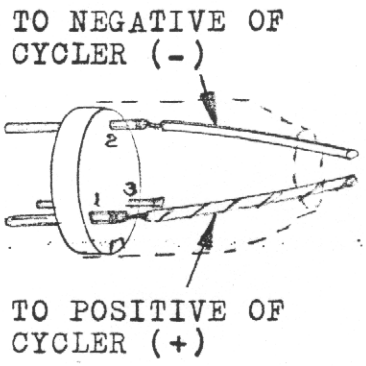

If your system has the Buddy Box feature with the 6-pin DC charge connector, it will be necessary to add connectors for external voltage connection. A suggestion is to use EK's flanged connector with wires, part no. 200-3000 which can either be mounted to the case or left taped to the inside of the case, removing the back cover for connecting to cycler. In either situation the connector leads will need to be soldered to the on-off switch terminals as shown below. Now attach your cyclers

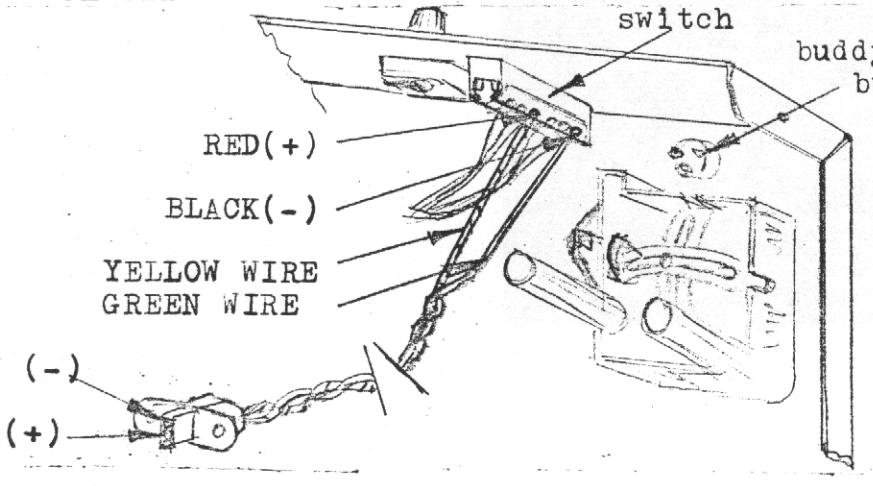

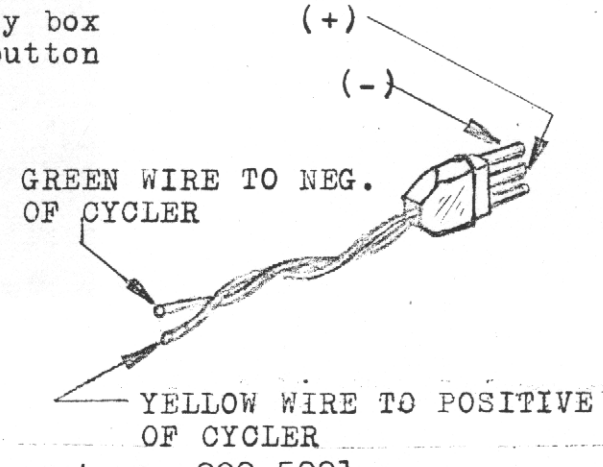

leads to mating EK connector with wires, part no. 200-5001, observing polarity, and you now have completed the transmitter conversion.

To connect your cycler to the airborne receiver battery pack is very simple. Just add EK connector with wires, part no. 200-5001, to the cycler leads, observing polarity (the green wire is the negative, the yellow wire is the positive). This connector mates with the flanged battery charge connector on the switch harness, which allows discharging the battery without removal from your model. This completes the conversions for both transmitter and receiver battery packs.

EK Products, Inc.

EK PRODUCTS INC.
3233 W. EULESS BLVD. HURST, TEXAS 76053
(817) 283-4092

Progress and Reliability in Radio Control

June 15, 1972

SERVICE CENTER BULLETIN #6-15-72

Subject: 50K Pots on Encoder Board R-018 (Sample Enclosed)

We have experienced problems with these pots in the encoder board. If the pot is bent during handling as is always the possibility on a 2 legged device, the rivet securing the end terminal may be loosened and the contact to the resistance element may become open or intermittant.

If you have a unit that may experience intermittant or erratic control and pulse generation, or pulses are lost after a certain channel, the likely suspect is this 50K pot in a control stage.

The cure is to replace the defective pot, and be sure that you do not bend these pots. Then you should solder the rivets to the terminals on all pots, but be careful to apply only a minimum of heat by quickly making the solder joint and using the minimum of solder.

Do Not solder on the element side!

None of the Super-Pro units have these pots and all units manufactured recently do not have this 50K pot, but we have redesigned the encoder board and are now using a lay down, 3 legged, more reliable 50K pot R-019. This pot is not physically interchangeable with R-018.

Sincerely,

Robert L Elliott

R. L. Elliott
President
EK Products, Inc.

RLE:mh

Enclosure

30.03

EK PRODUCTS INC.
3233 W. EULESS BLVD. HURST, TEXAS 76053
(817) 283-4092

Progress and Reliability in Radio Control

CUSTOMER SERVICE BULLETIN

DATE: April 3, 1973

SUBJECT: Conversion to Buddy Box System

We are now offering as an option, transmitters equipped with a plug for connecting a Buddy Box cable. All the connections, switch and electronics necessary for the Buddy Box function are in the transmitter.

Two changes were made in the transmitter in order to accomodate this provision.

1. The rudder function on a single-stick unit was reversed from single-stick produced earlier. This should not cause any problems and is mentioned only to explain this change.

2. The DC charge cord was changed on the transmitter end, to a 6 pin-polarized to mate with the Buddy Box 6 pin cable plug.

The special instructions for using the Buddy Box function are enclosed with this Service Bulletin. Please note;

Any transmitter can be converted to the Buddy Box function. This will be covered in a Service Bulletin to be issued later.

Thank you,

Don Downing

Don D. Downing
Service Manager
EK Products, Inc.

DDD/ss

INSTRUCTION FOR TRANSMITTERS WITH BUDDY BOX PROVISION

Transmitters with Buddy Box Provision differs from other transmitters in that a different plug is mounted on the bottom of the transmitter that permits both a special DC charging harness and the Buddy Box cable to use the same plug. This is a 6 pin - polarized and grounded type.

The Buddy Box cable when plugged into two similar transmitters permits an instructor holding the master transmitter to transfer control to the slave transmitter by depressing the push button switch located directly above the left control stick on a dual-stick transmitter or on the top right on a single-stick transmitter. The master can regain control on release of the push-button.

The R/F is only transmitted by the master transmitter and the receiver used must be the one tuned to the master transmitter.

The interconnecting cable permits the encoder in the slave to be switched to replace the encoder in the master. The cable end with a red band identifies the plug that must be mated with the master transmitter. In addition, the slave end of the cable when mated with the slave transmitter, turns off the R/F output of the slave transmitter.

The Buddy Box feature can only be used with similar transmitters with similar stick arrangements as listed below.

1. A dual-stick with throttle on the left (TL) can be used with any other TL transmitter of any frequency.

2. A dual-stick with throttle on the right (TR) can be used with any other TR transmitter of any frequency.

3. A dual-stick (TL) or a single stick can be used with any other single-stick transmitter on any frequency.

4. A dual-stick (TR) transmitter cannot be used with a dual-stick TL or a single-stick transmitter. In this case some control functions would be reversed and the servos would move in opposite directions.

NOTE: 1. Special DC charge cord order #U-064
2. Buddy Box Cable - order #U-065

The following procedure is for converting 1969-72 transmitters for the 1973 Buddy Box system (Logictrol, Champion or Pro-Series with RF-5 Board). Earlier units (Log.III and etc.) may so be converted with the necessary changes.

NOTE: If transmitter has printed circuit type charging circuit, this will have to changed to the newer version using a terminal strip to accommodate the charger Buddy-Box connector.

1. Remove old DC charge socket, leaving charging diode (cathode end) connected to AC recepticle and 47K resistor connected to terminal strip. The hole for the new socket must be enlarged to 5/8" diameter to accept cable plug. Replace with new 6 pin socket J, (part #E-052). The plug shield grounding pin on J, will be orientated to the left as you look into the back of transmitter. Solder pin 6 of J, to plug shield grounding pin of J,. The charging diode anode is soldered to pin 2. The black (neg.) charging wire from on/off switch and loose end of the 47K resistor is soldered to pin 4.
(May be helpful to refer to a transmitter with Buddy Box capability).

2. Install S_2 (push button snap-action switch) centered between left control stick and top of case on a dual stick and top right on a single stick. (drill size 1/4").

3. Remove encoder output wire (black/white) from encoder board and connect to C. terminal of S_2.

4. Two yellow wires are soldered to pin 5 of J,.

5. Connect one yellow wire to encoder output on encoder board. Connect other yellow wire to N.C. terminal of S_2.

6. Connect an orange wire from pin 1 of J, to N.O. terminal of S_2.

7. Remove RF board from transmitter. Refer to parts layout portion of drawing #A-162 enclosed. Remove 1.2K resistor going to base of Q7 and black/white signal wire land. Cut land (A) and drill holes in board as indicated. Install D_9, D_{10}, R_3 and violet/white wire. Solder anodes of D_9, D_{10}, to top of R_3, forming an interconnection. Route violet/shite wire from RF board to pin 3 of J,.

8. Install R_2 (27K) on encoder board, in any convenient location, between B+ buss and encoder output buss.

9. Re-install RF board.

10. Refer to enclosed instruction sheet for operational Ck of Buddy Box.

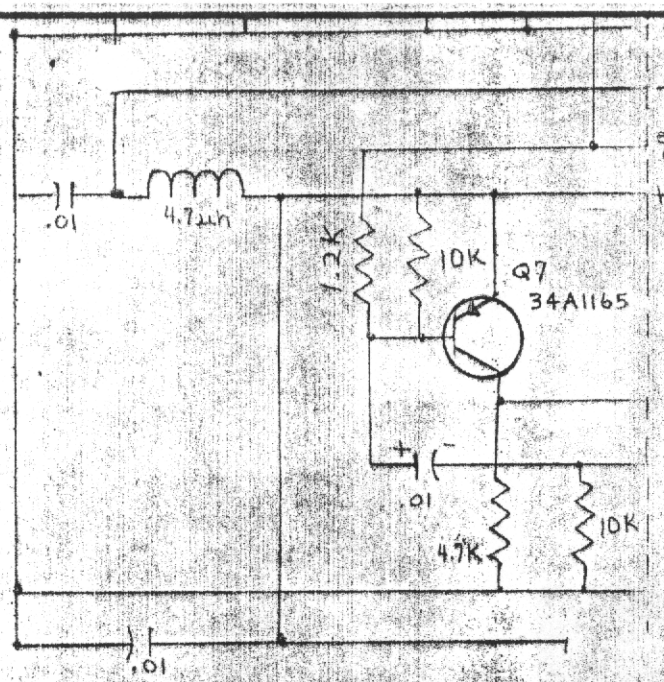

Before Conversion (Drawing # B-588)

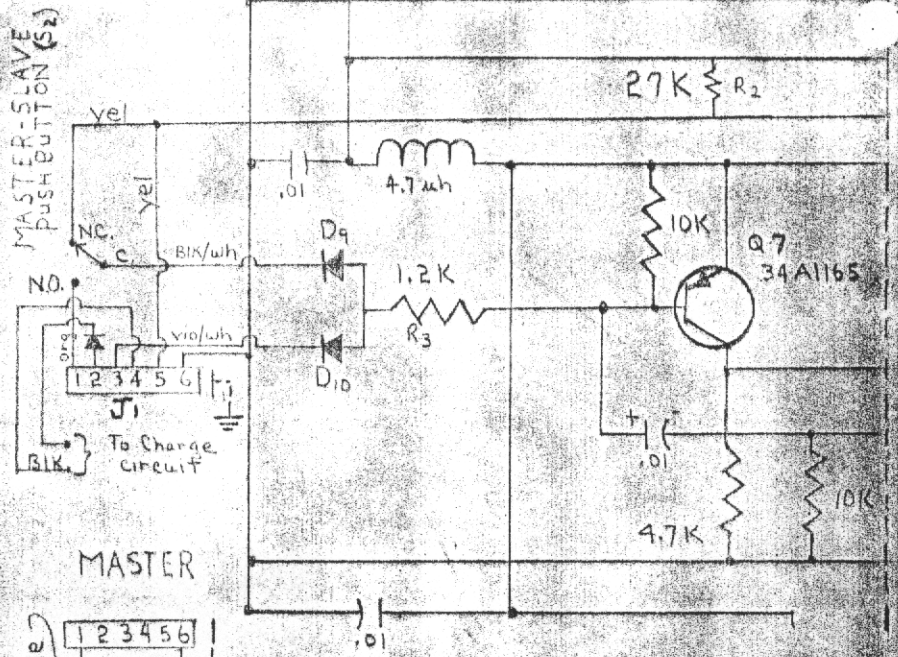

MASTER

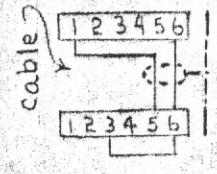

SLAVE

After Conversion

	Type	Stock Number
D_9, D_{10}	DA2208	D-001
J_1	6 pin flanged	E-052
R_2	27K ½w	R4-2730
R_3	1.2K ½w	R4-1220
S_2	SPDT Push button	E-050
cable	Buddy Box	U-065

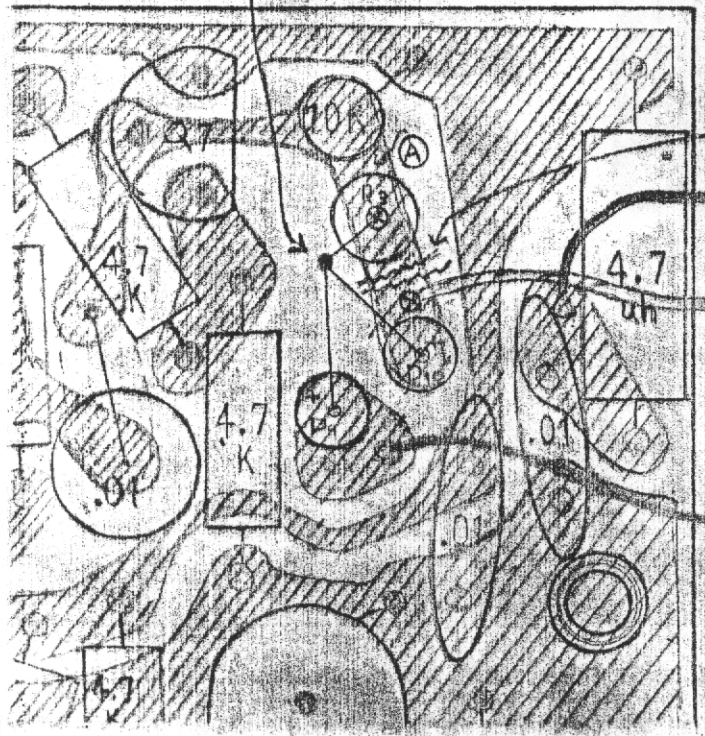

PARTS LOCATION

RF-5 TRANSMITTER

PARTIAL (Drawing # B-633)

E K PRODUCTS, INC.

3233 W. EULESS BLVD., HURST, TEXAS 76053

SCALE —	REVISIONS	BY	DATE
DATE 3/30/73			
DR'N BS CKD RYE			
APV'D RYE			

TITLE BUDDY BOX CONVERSION FOR 1969-72 TRANSMITTERS

NO. A-162

BRUNING 40-105

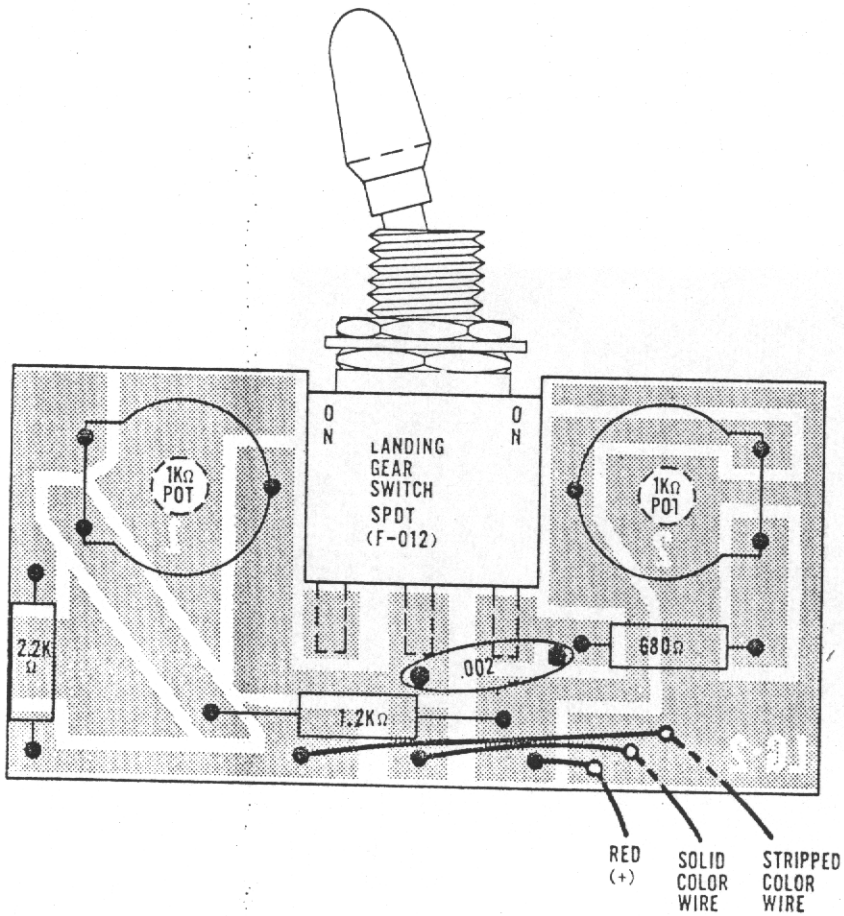

E K PRODUCTS, INC.
3233 W. EULESS BLVD., HURST, TEXAS 76053

SCALE	REVISIONS	BY	DATE
DATE 8-9-73			
DR'N MWP CKD			
APVD			

TITLE: PARTS LOCATION—CONVERSION FOR L. G. SWITCH CIRCUIT

NO B-665

PARTS LIST FOR CONVERSION FOR L.G.
NEXT ASSEMBLY SWITCH CIRCUIT

PL- B-665

PART NUMBER	DESCRIPTION		ALL
C-038	.002 uf Capacitor		1
F-012	Switch - toggle spdt		1
R-020	Pot - 1K OHM		2
R4-1220	1.2K OHM Resistor		1
R4-2220	2.2K OHM Resistor		1
R4-6810	680 OHM Resistor		1
W-002	Wire - Red		1
W-	Wire - Solid Color		1
W-	Wire - Stripped Color		1

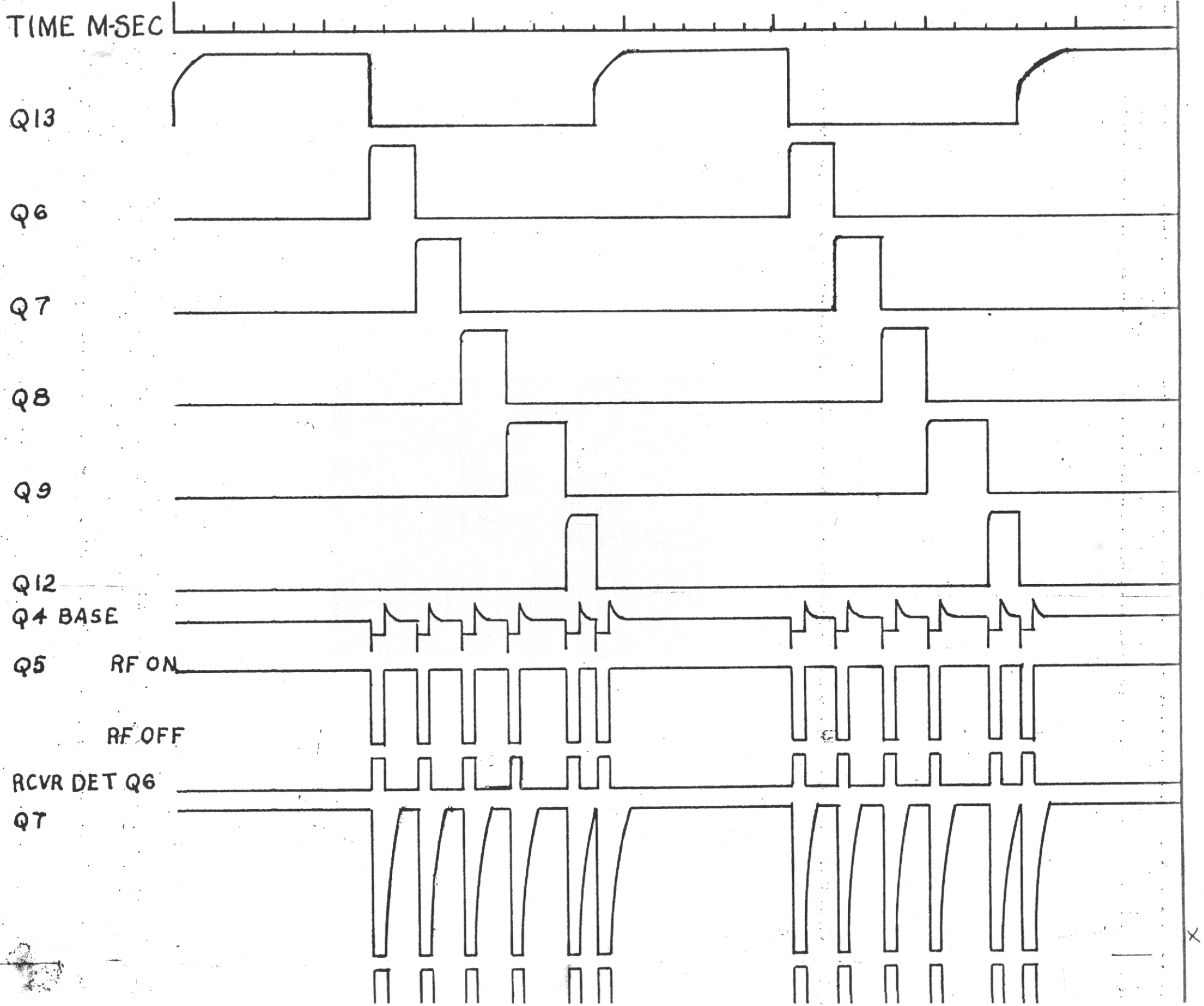
TIME M-SEC
Q13
Q6
Q7
Q8
Q9
Q12
Q4 BASE
Q5
RF ON
RF OFF
RCVR DET Q6
QT

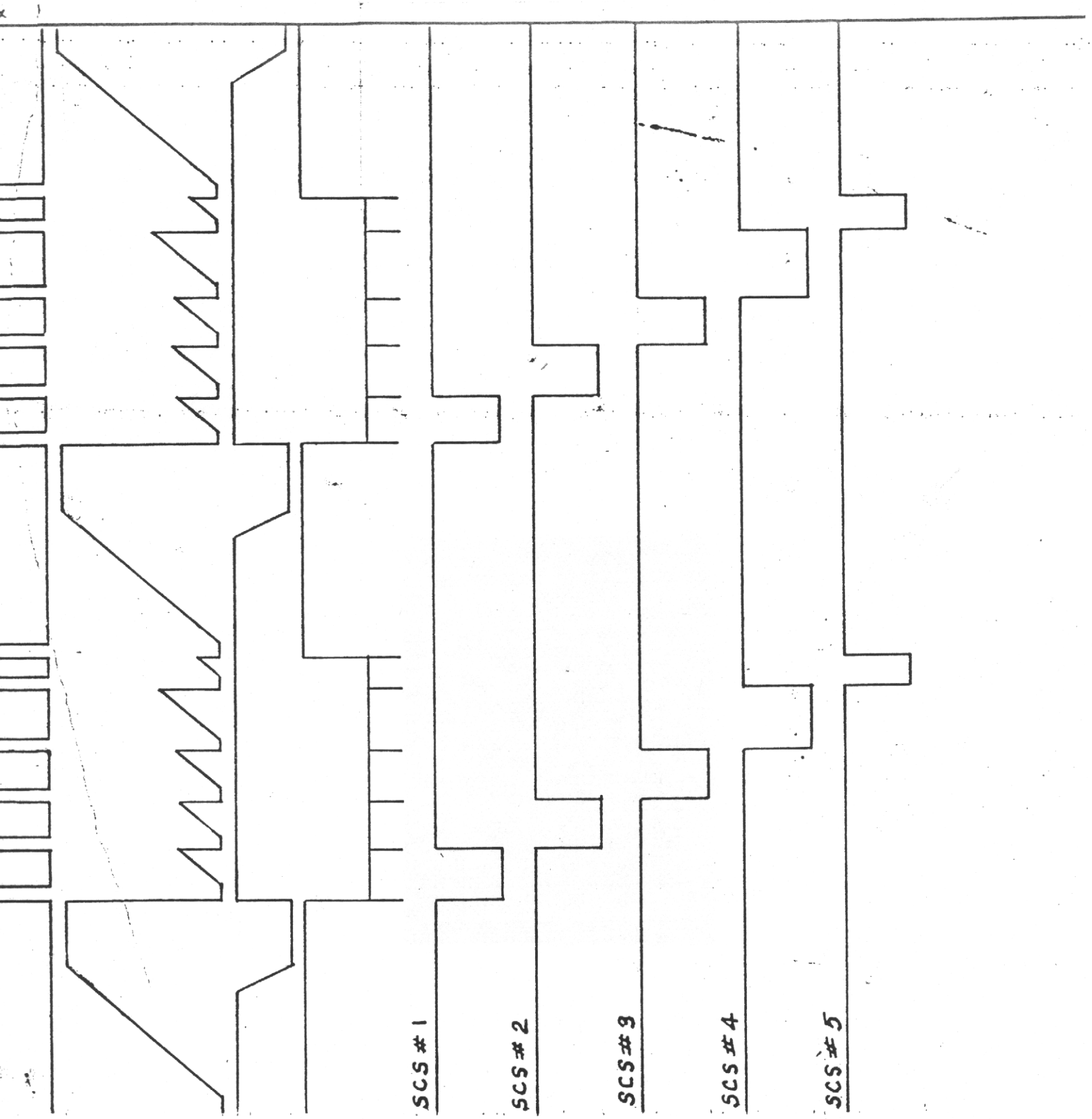

E K PRODUCTS, INC.
3233 W. EULESS BLVD., HURST, TEXAS 76053

SCALE	REVISIONS	BY	DATE
DATE FEB 4, 1969			
DR'N. WDB / CKD.			
AP'VD.			

TITLE LOGICTROL MS-III TRANSMITTER & RECEIVER WAVESHAPES

NO. B-538

HOBBY LOBBY TRANSMITTER TUNING PROCEDURE:

1. Buffer tuning (c1 trimmer) for all frequencies. Solder a test lead to the + land of the PC board for the scope ground to attach. Attach scope probe to the collector of the modulator transistor Q5 or to the end of the 4.7 uhy chockein series with the buffer resonant circuit L1 and C1. Be sure RF board is tightly attached to the case by the two screws, providing a positive and secure ground.
2. Tune C1 for minimum voltage drop across Q5. This is a dip, but due to the nature of the hookup of the scope, the dip appears as a positive going voltage. The scope reference should be set at midscale on the screen, approximately 0.1 volt per division, and the sweep rate at approximately 0.5 ms per division. The indicated voltage is in the negative direction in relation to the midscale zero reference, the dip occurs when the voltage appears the least amount negative or most positive. This tunes the buffer stage to draw minimum current at resonance with the carrier frequency. The saturation voltage of Q5 is like an ammeter in series with the tuned curcuit of L1 and C2.
3. Antenna tuning (C2 trimmer) for 72 mhz. To insert the meter in the circuit: Locate the striped red jumper wire that connects L4 (4.7uhy) to the RF board filetered B+ land. Remove jumper wire end that is soldered to the filtered B+ land. Insert meter between filtered B+ land and the loose wire end. Meter positive goes to B+ land and the negative goes to loose jumper end. Tune C2 for minimum meter reading (dip), trimmer should be nearly at the clockwise limit when correctly tuned. The total transmitter current drain for 72 mhz as measured in series with the positive wire from the switch to the battery is 90 to 110 ma. as measured using a 20,000 ohm per volt voltmeter. Nominal drain is 95 ma.
4. Antenna final tuning (C2) for 27 and 53 mhz. Tune C2 for maximum output on RF meter on scope, field strength meter or whatever output measurement device is used. The total transmitter current drain for 27 mhz should be 100 to 130 ma. 125 ma is nominal. Total drain of 53 mhz should be 110 to 130 ma, 120 nominal.
5. Check for adequate power output. Check wave form and output on expanded scope scale (50 u sec/division).

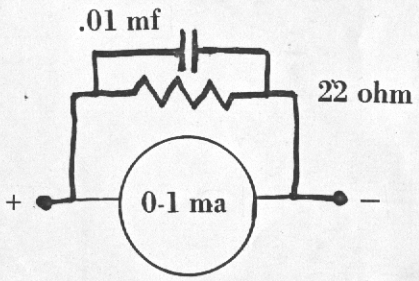

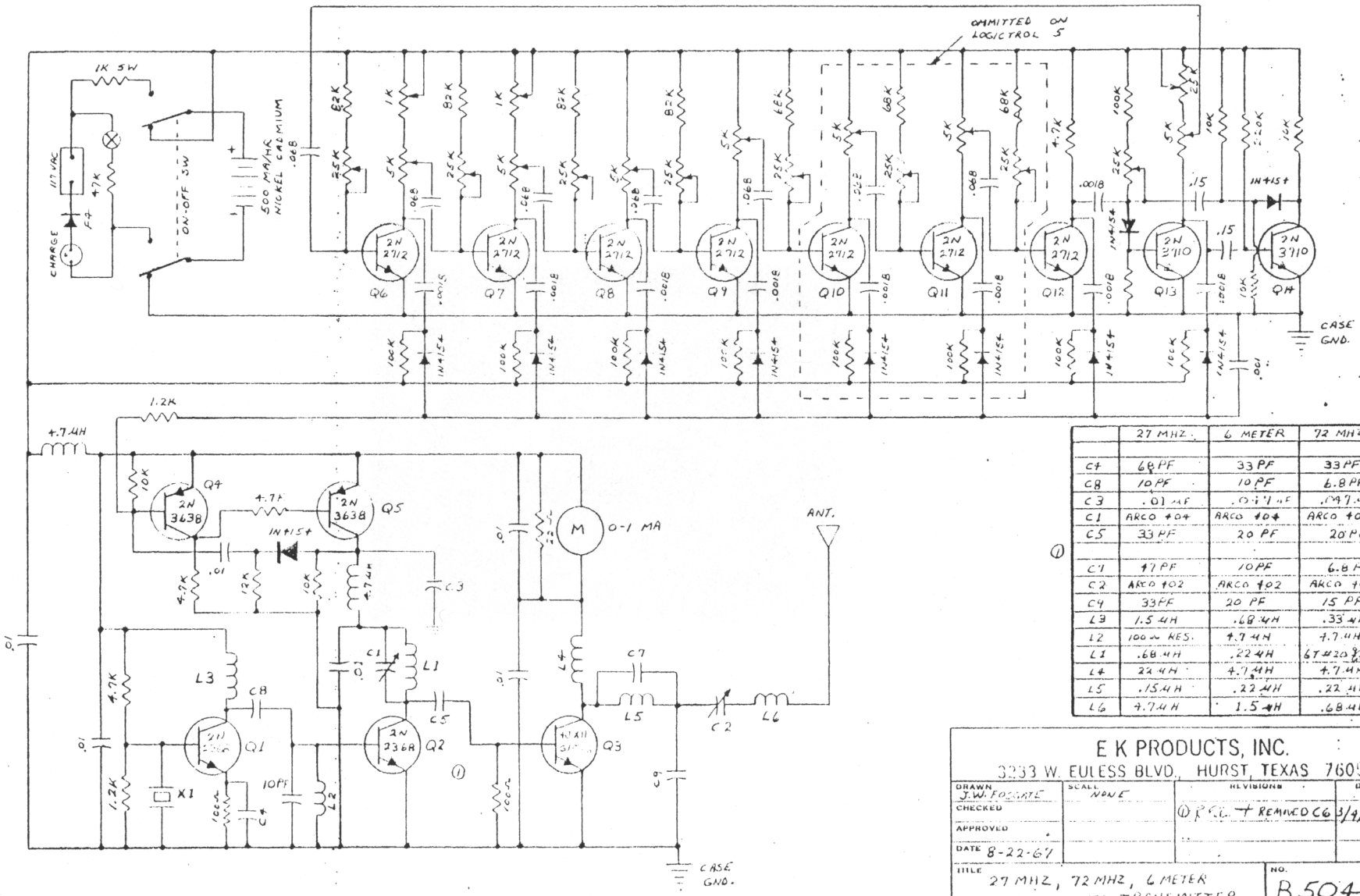

	27 MHZ.	6 METER	72 MHZ
C4	68 PF	33 PF	33 PF
C8	10 PF	10 PF	6.8 PF
C3	.01 MF	.01 MF	.047 MF
C1	ARCO #04	ARCO #04	ARCO #03
C5	33 PF	20 PF	20 PF
C7	47 PF	10 PF	6.8 PF
C2	ARCO #02	ARCO #02	ARCO #02
C9	33 PF	20 PF	15 PF
L3	1.5 UH	.68 UH	.33 UH
L2	100 Ω RES.	4.7 UH	4.7 UH
L1	.68 UH	.22 UH	67 #20 [illegible]
L4	22 UH	4.7 UH	4.7 UH
L5	.15 UH	.22 UH	.22 UH
L6	4.7 UH	1.5 UH	.68 UH

①

E K PRODUCTS, INC.
3233 W. EULESS BLVD., HURST, TEXAS 76053

DRAWN J.W. FOSGATE	SCALE NONE	REVISIONS	DATE
CHECKED		① P.C. + REMOVED C6	3/4/68
APPROVED			
DATE 8-22-67			

TITLE 27 MHZ, 72 MHZ, 6 METER [illegible] TRANSMITTER

NO. B504

50

'70 Logictrol - rest of schematics are the same for both units

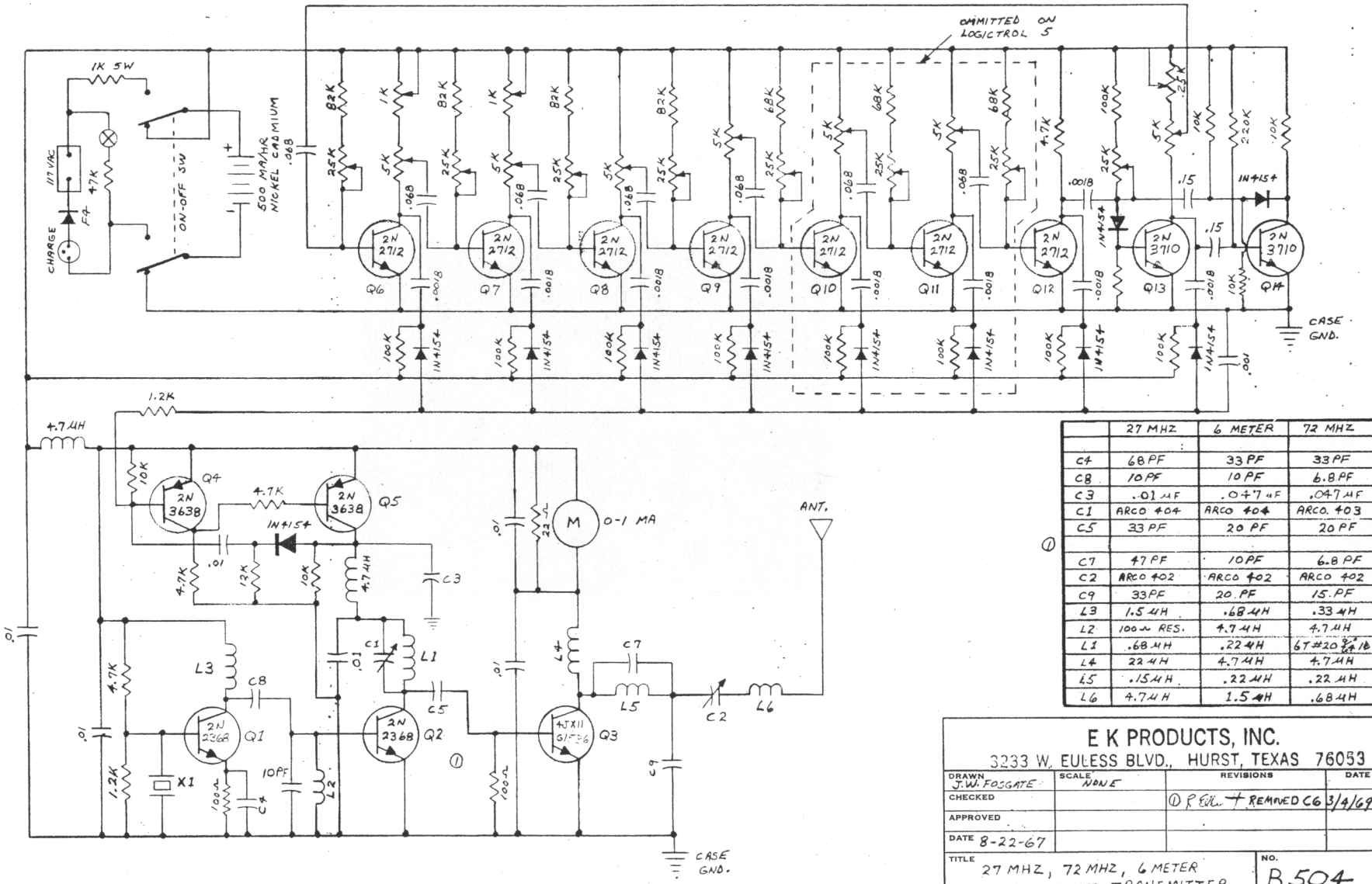

	27 MHZ	6 METER	72 MHZ
C4	68 PF	33 PF	33 PF
C8	10 PF	10 PF	6.8 PF
C3	.01 µF	.047 µF	.047 µF
C1	ARCO 404	ARCO 404	ARCO. 403
C5	33 PF	20 PF	20 PF
C7	47 PF	10 PF	6.8 PF
C2	ARCO 402	ARCO 402	ARCO 402
C9	33 PF	20 PF	15 PF
L3	1.5 µH	.68 µH	.33 µH
L2	100Ω RES.	4.7 µH	4.7 µH
L1	.68 µH	.22 µH	6T #20 3/4 1/8
L4	22 µH	4.7 µH	4.7 µH
L5	.15 µH	.22 µH	.22 µH
L6	4.7 µH	1.5 µH	.68 µH

①

E K PRODUCTS, INC.
3233 W. EULESS BLVD., HURST, TEXAS 76053

DRAWN J.W. FOSGATE	SCALE NONE	REVISIONS	DATE
CHECKED		① R EVL. + REMOVED C6	3/4/69
APPROVED			
DATE 8-22-67			

TITLE 27 MHZ, 72 MHZ, 6 METER LOGICTROL II, III TRANSMITTER

NO. B504

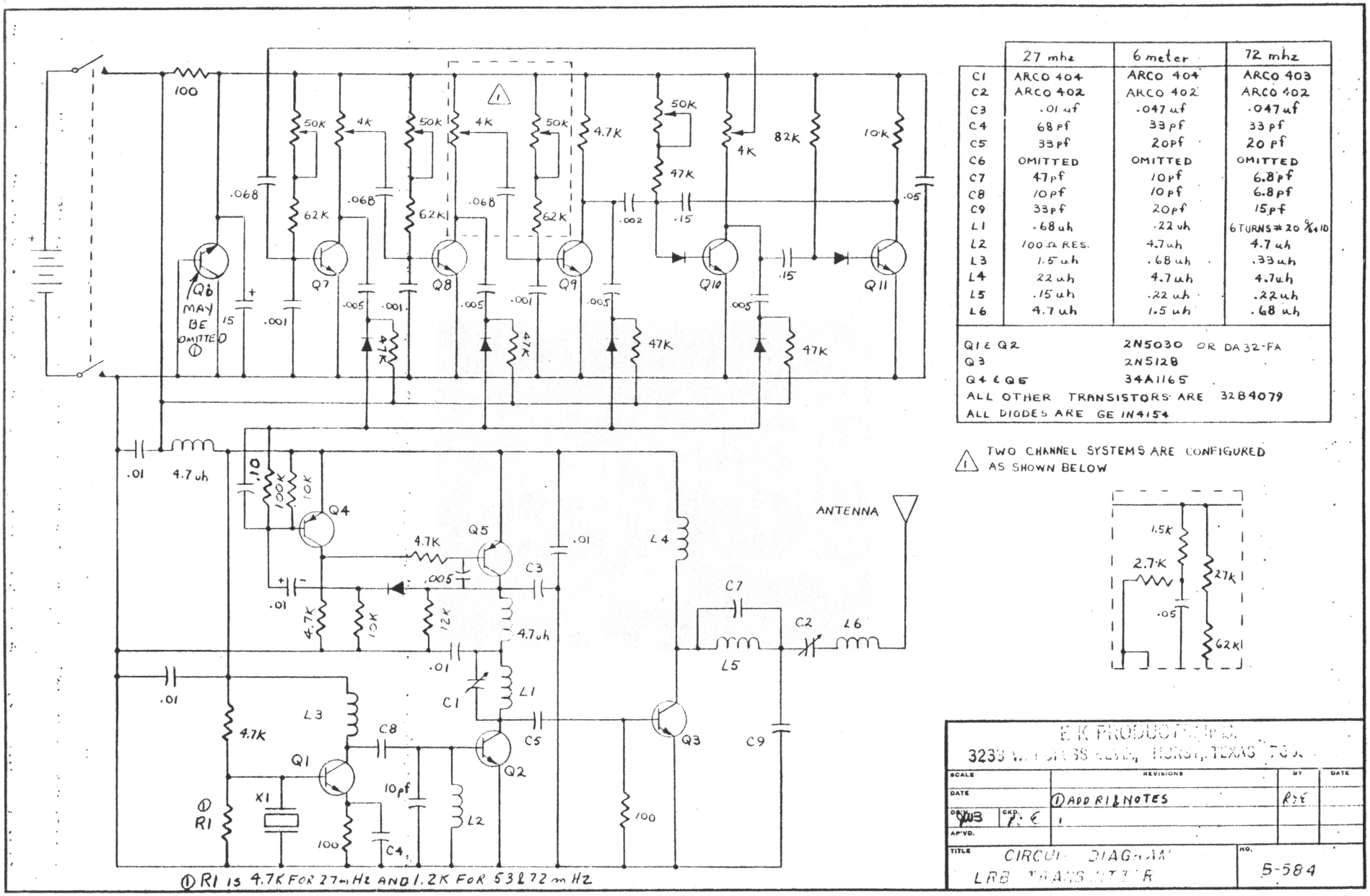

	27 mhz	6 meter	72 mhz
C1	ARCO 404	ARCO 404	ARCO 403
C2	ARCO 402	ARCO 402	ARCO 402
C3	.01 uf	.047 uf	.047 uf
C4	68 pf	33 pf	33 pf
C5	33 pf	20 pf	20 pf
C6	OMITTED	OMITTED	OMITTED
C7	47 pf	10 pf	6.8 pf
C8	10 pf	10 pf	6.8 pf
C9	33 pf	20 pf	15 pf
L1	.68 uh	.22 uh	6 TURNS #20 ⅜ ID
L2	100 Ω RES.	4.7 uh	4.7 uh
L3	1.5 uh	.68 uh	.33 uh
L4	22 uh	4.7 uh	4.7 uh
L5	.15 uh	.22 uh	.22 uh
L6	4.7 uh	1.5 uh	.68 uh

Q1 & Q2 2N5030 OR DA32-FA
Q3 2N5128
Q4 & Q5 34A1165
ALL OTHER TRANSISTORS ARE 3284079
ALL DIODES ARE GE IN4154

△1 TWO CHANNEL SYSTEMS ARE CONFIGURED AS SHOWN BELOW

E.K. PRODUCTS INC.
3233 W. [illegible] BLVD., HURST, TEXAS 76053

SCALE	REVISIONS	BY	DATE
DATE	① ADD R1 & NOTES	RSE	
DRN. WB / CKD. [illegible]			
APV'D.			

TITLE CIRCUIT DIAGRAM LRB TRANSMITTER

NO. 5-584

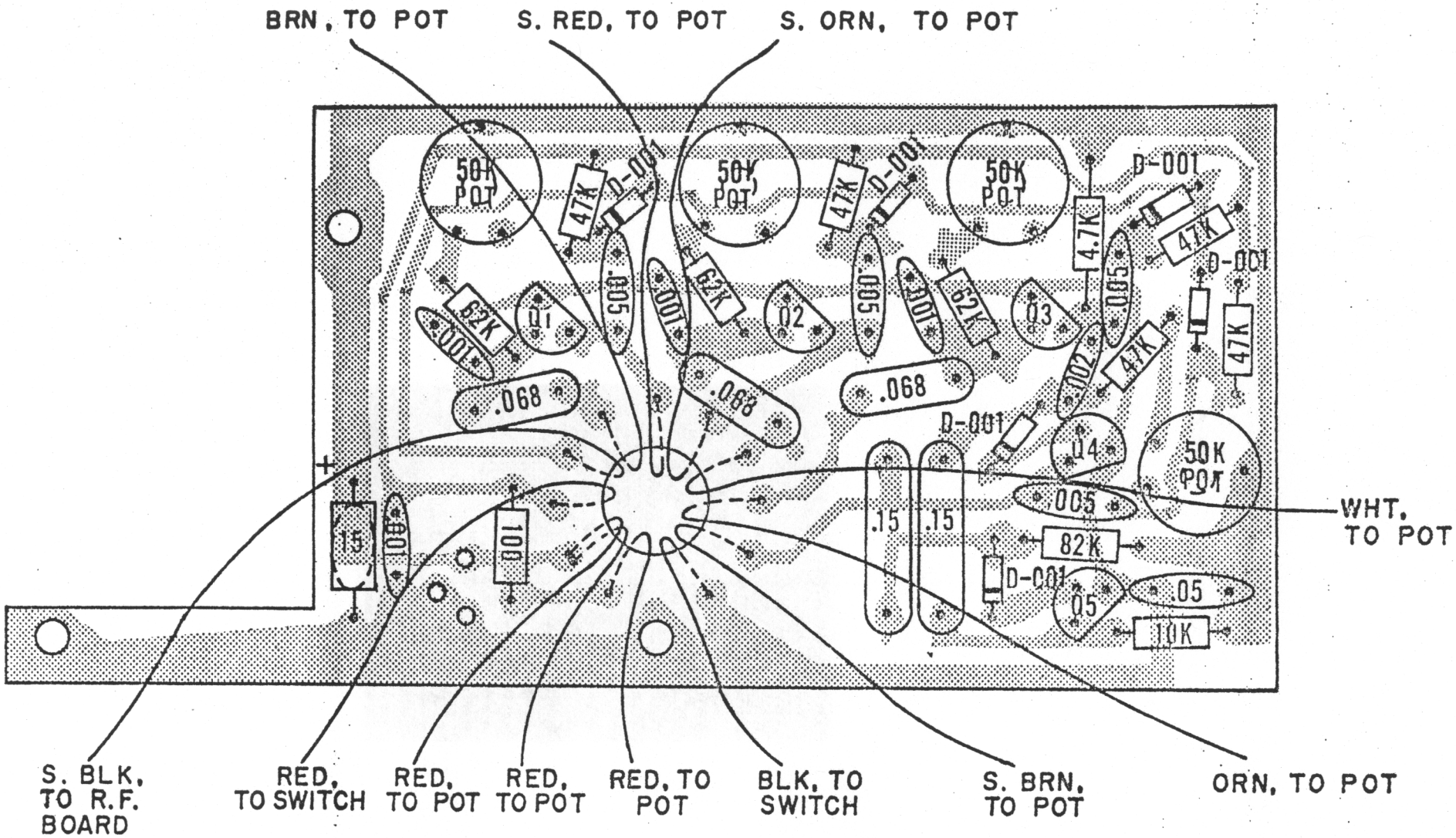

NOTES:

1. UNLESS OTHERWISE SPECIFIED:
   ALL CAPACITANCE VALUES ARE IN MICROFARADS.
   ALL RESISTANCE VALUES ARE IN OHMS.
2. TRANSISTORS Q1 THRU Q5 ARE X32B4079 (Q-025).
3. DIODES ALL ARE DA2208 (D-001).

E K PRODUCTS, INC.
3233 W. EULESS BLVD., HURST, TEXAS 76053

SCALE	REVISIONS	BY
DATE 7-3-73		
DR'N MWP CKD		
APVD		

TITLE PARTS LOCATION — LRB 73
ENCODER (2 & 3 CHANNELS)

NO. A-169

BRUNING 40-105

PARTS LIST FOR NEXT ASSEMBLY: Parts Location - LRB 73
ENCODER 3 CHANNEL

PL- A-169

PART NUMBER	DESCRIPTION	QUANTITY 3 CH.		
C-001	.05 ufd	1		
C-002	.001 ufd	4		
C-025	.068 ufd	3		
C-026	.15 ufd	2		
C-028	15 ufd 15v	1		
C-037	.005 ufd	4		
C-064	.002 ufd	1		
Q-025	32B4079 NPN ENCODER	5		
D-001	DA2208 DIODE	6		
R-019	POT - 50K TRIM - SPAIN	4		
R4-1010	RESISTOR - 100 OHM	1		
R4-1030	RESISTOR - 10K OHM	1		
R4-4720	RESISTOR - 4.7K OHM	1		
R4-4730	RESISTOR - 47K OHM	5		
R4-6235	RESISTOR - 62K OHM	3		
R4-8230	RESISTOR - 82K OHM	1		
W-000	WIRE BLACK	1		
W-001	WIRE BROWN	1		
W-002	WIRE RED	4		
W-003	WIRE ORANGE	1		
W-009	WIRE WHITE	1		
W-090	WIRE S. BLACK	1		
W-091	WIRE S. BROWN	1		
W-092	WIRE S. RED	1		
W-093	WIRE S. ORANGE	1		

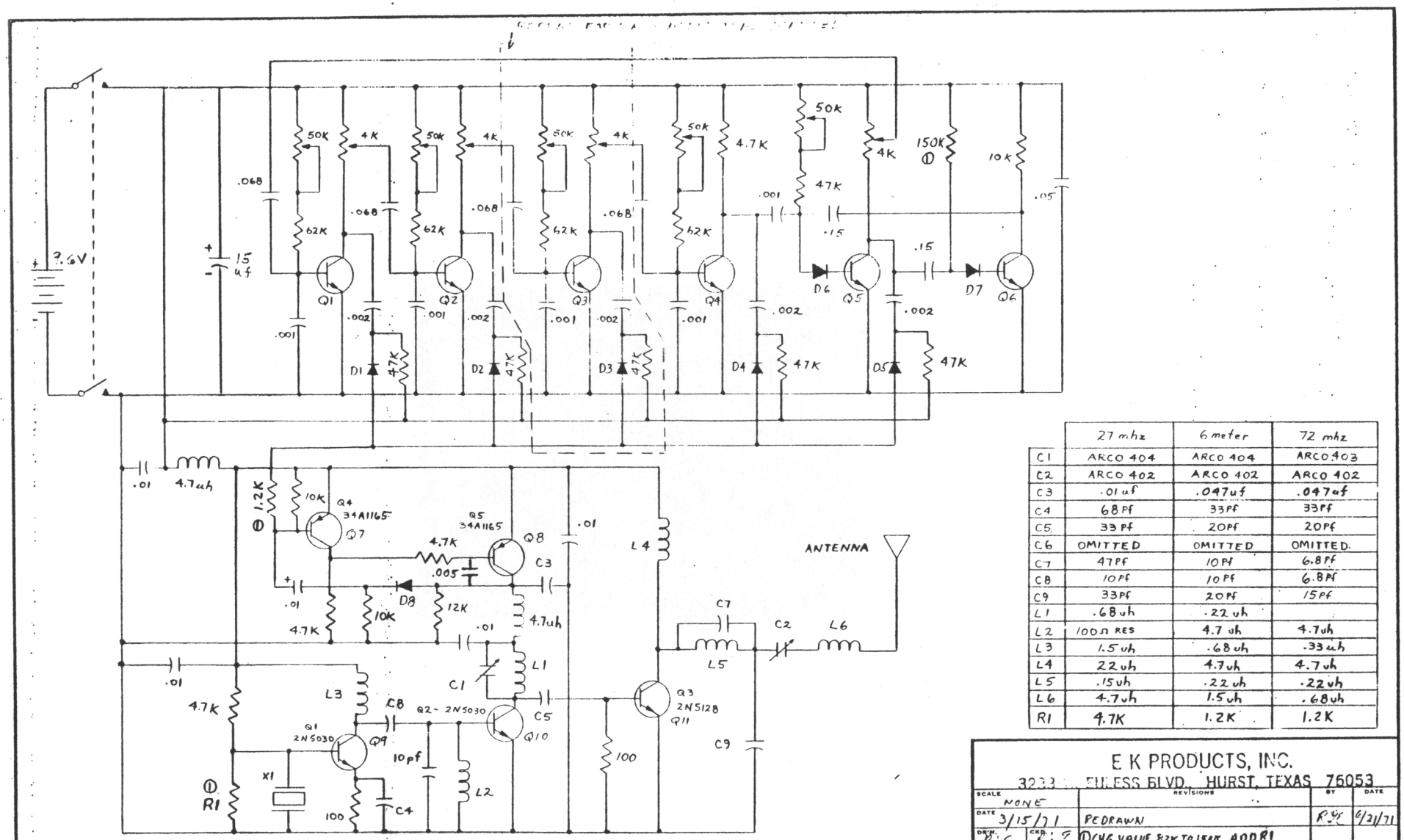

	27 mhz	6 meter	72 mhz
C1	ARCO 404	ARCO 404	ARCO 403
C2	ARCO 402	ARCO 402	ARCO 402
C3	.01 uf	.047uf	.047uf
C4	68 pf	33pf	33pf
C5	33 pf	20pf	20pf
C6	OMITTED	OMITTED	OMITTED
C7	47pf	10pf	6.8pf
C8	10pf	10pf	6.8pf
C9	33pf	20pf	15pf
L1	.68uh	.22uh	
L2	100Ω RES	4.7 uh	4.7uh
L3	1.5uh	.68uh	.33uh
L4	22uh	4.7uh	4.7uh
L5	.15uh	.22uh	.22uh
L6	4.7uh	1.5uh	.68uh
R1	4.7K	1.2K	1.2K

△ UNLESS OTHERWISE SPECIFIED:
ALL TRANSISTORS ARE X3284079
ALL DIODES ARE IN4154 OR EQUIV.

E K PRODUCTS, INC.
3233 EULESS BLVD. HURST, TEXAS 76053

SCALE NONE	REVISIONS	BY	DATE
DATE 3/15/71	REDRAWN	RJC	6/21/71
DRN. RJS CKD. RJS	① CHG. VALUE 82K TO 150K, ADD R1		
APVD. RJC			

TITLE CIRCUIT DIAGRAM
4-6 CHANNEL LOG & CHAMP. TRANS.

NO. B-588

cc

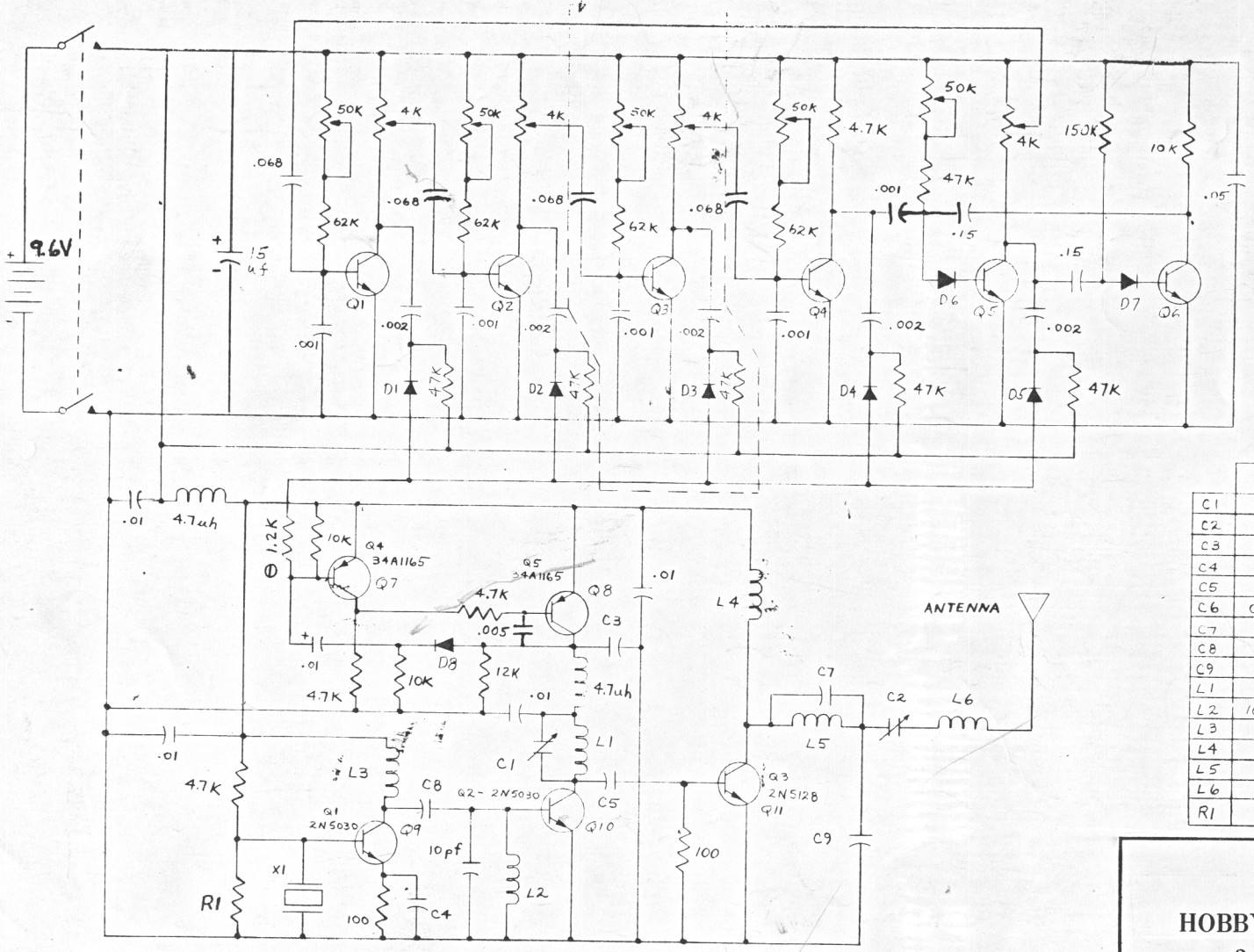

	27 mhz	6 meter	72 mhz
C1	ARCO 404	ARCO 404	ARCO 403
C2	ARCO 402	ARCO 402	ARCO 402
C3	.01 uf	.047uf	.047uf
C4	68 Pf	33Pf	33Pf
C5	33 Pf	20Pf	20Pf
C6	OMITTED	OMITTED	OMITTED
C7	47Pf	10Pf	6.8Pf
C8	10Pf	10Pf	6.8Pf
C9	33Pf	20Pf	15Pf
L1	.68uh	.22uh	
L2	100Ω RES	4.7uh	4.7uh
L3	1.5uh	.68uh	.33uh
L4	22uh	4.7uh	4.7uh
L5	.15uh	.22uh	.22uh
L6	4.7uh	1.5uh	.68uh
R1	4.7K	1.2K	1.2K

Encoder and modulator transistors:

Diodes are 1N4154 or equiv.

HOBBY LOBBY TRANSMITTER

3, 4, 5, & 6 Channels

PARTS LIST FOR NEXT ASSEMBLY: RF 5 TRANSMITTER - 1969 - 1971 Pro Series, '70-71 LOGICTROL, '70-'72 CHAMP., '71---LRB, '72 SUPER PRO

PL- B-633

PART NUMBER	DESCRIPTION	QUANTITY 27	53	72
C-017	.01 uf CAPACITOR	5	4	4
C-037	.005 uf "	1	1	1
C-031	68 pf "	1	0	0
C-011	33 pf "	2	1	1
C-048	47 pf "	1	0	0
C-032	10 pf "	2	3	1
C-001	.05 uf "	0	1	1
C-010	20 pf "	0	2	1
C-019	6.8 pf "	0	0	2
C-042	15 pf "	0	0	1
C-046	.01 uf Mylar "	1	1	1
C-043	402 Trim "	1	1	1
C-044	403 Trim "	0	0	1
C-045	404 Trim "	1	1	0
D-001	DA2208 DIODE	1	1	1
Q-020	D32F4 TRANSISTOR	2	2	2
Q-010	2N5128/5129 "	1	1	1
Q-026	X34A1165 "	2	2	2
A-027	COIL - BUFFER	0	0	1
L-007	.68 uh CHOKE	1	1	1
L-012	.15 uh CHOKE	1	1	0
L-002	22 uh CHOKE	1	0	0
L-010	.15 uh CHOKE	1	0	0
L-008	4.7 uh CHOKE	1	2	2
L-009	.22 uh CHOKE	0	2	1
L-005	.33 uh CHOKE	0	0	1
R4-4720	4.7K Ω RESISTOR	4	3	3
R4-1220	1.2K Ω "	1	2	2
R4-1010	100 Ω "	3	2	2
R4-1030	10K Ω "	2	2	2
R4-1230	12K Ω "	1	1	1
X-002A - E	CRYSTAL	1	0	0
X-004A - F	CRYSTAL	0	1	0
X-006A - G	CRYSTAL	0	0	1
W-002	RED WIRE - 6"	1	1	1
W-005	GREEN WIRE - 6"	1	1	1
W-090	S. BLACK WIRE - 6"	1	1	1
W-092	S. RED WIRE - 6"	1	-	-
U-013	HEAT SINK FANTYPE T 05	1	1	1

PARTS LIST FOR NEXT ASSEMBLY	RF 5 TRANSMITTER - 1969 - 1971 Pro Series, '70-71 LOGICTROL, '70-'72 CHAMP., '71---LRB, '72 SUPER PRO	PL- B-633

PART NUMBER	DESCRIPTION	QUANTITY 27	53	72
C-017	.01 uf CAPACITOR	5	4	4
C-037	.005 uf "	1	1	1
C-031	68 pf "	1	0	0
C-011	33 pf "	2	1	1
C-048	47 pf "	1	0	0
C-032	10 pf "	2	3	1
C-001	.05 uf "	0	1	1
C-010	20 pf "	0	2	1
C-019	6.8 pf "	0	0	2
C-042	15 pf "	0	0	1
C-046	.01 uf Mylar "	1	1	1
C-043	402 Trim "	1	1	1
C-044	403 Trim "	0	0	1
C-045	404 Trim "	1	1	0
D-001	DA2208 DIODE	1	1	1
Q-020	D32F4 TRANSISTOR	2	2	2
Q-010	2N5128/5129 "	1	1	1
Q-026	X34A1165 "	2	2	2
A-027	COIL - BUFFER	0	0	1
L-007	.68 uh CHOKE	1	1	1
L-012	.15 uh CHOKE	1	1	0
L-002	22 uh CHOKE	1	0	0
L-010	.15 uh CHOKE	1	0	0
L-008	4.7 uh CHOKE	1	2	2
L-009	.22 uh CHOKE	0	2	1
L-005	.33 uh CHOKE	0	0	1
R4-4720	4.7K Ω RESISTOR	4	3	3
R4-1220	1.2K Ω "	1	2	2
R4-1010	100 Ω "	3	2	2
R4-1030	10K Ω "	2	2	2
R4-1230	12K Ω "	1	1	1
X-002A - E	CRYSTAL	1	0	0
X-004A - F	CRYSTAL	0	1	0
X-006A - G	CRYSTAL	0	0	1
W-002	RED WIRE - 6"	1	1	1
W-005	GREEN WIRE - 6"	1	1	1
W-090	S. BLACK WIRE - 6"	1	1	1
W-092	S. RED WIRE - 6"	1	-	-
U-013	HEAT SINK FANTYPE T 05	1	1	1

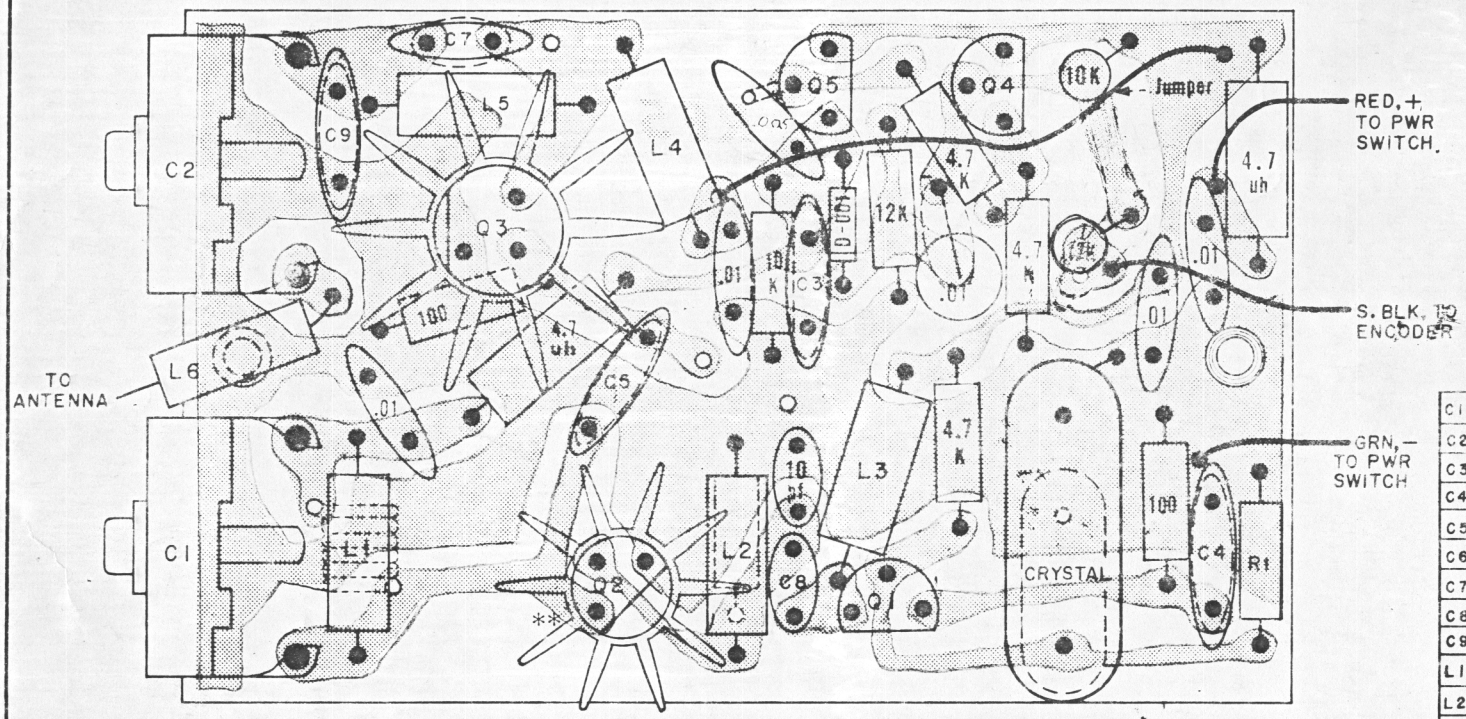

	27mHz	53mHz	72mHz
C1	ARCO 404	ARCO 404	ARCO 403
C2	ARCO 402	ARCO 402	ARCO 402
C3	.01	.05	.05
C4	68	33	33
C5	33	20 f	20
C6	OMITTED	OMITTED	OMITTED
C7	47	10	6.8
C8	10	10	6.8 p
C9	33 f	20 f	15
L1	.68	.22	COIL - BUFFER
L2	100 Ω RES.	4.7	4.7 f
L3	1.5	.66	.33
L4	22	4.7	4.7
L5	.15	.22 h	.22
L6	4.7	1.5	.68
R1	4.7 K	1.2 K	1.2 K

**DEPENDING ON FREQUENCY, THIS HEAT SINK MAY OR MAY NOT BE INCLUDED.

Capacitances in Microfarads
Q1 & 2: 2N5030
Q3: 2N5128/5129
Q4 & 5:

TRANSMITTER R.F. BOARD
4, 5 & 6 CHANNEL TRANSMITTERS

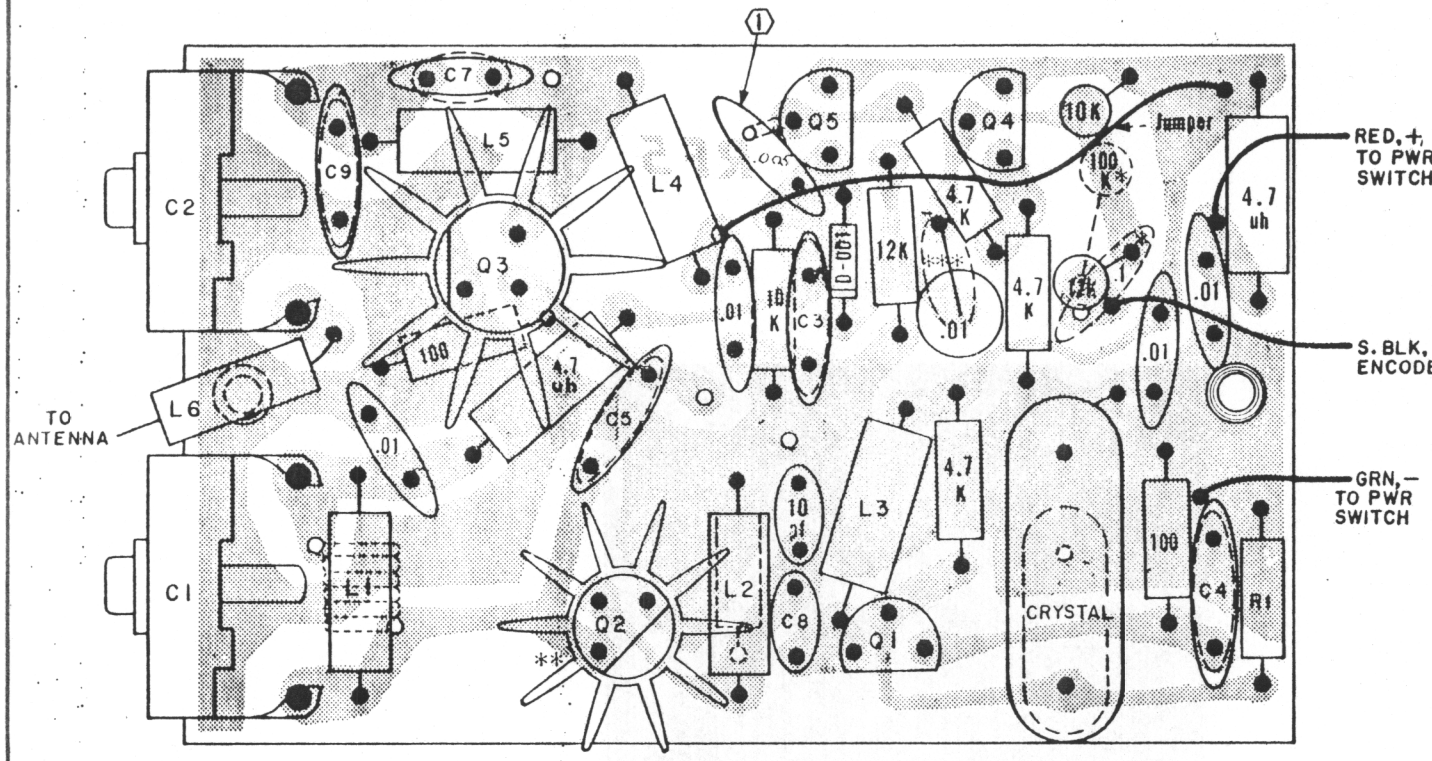

*ON LRB ONLY, OMITTING THE 1.2 K RESISTOR.

	27mHz	53mHz	72mHz
C1	ARCO 404	ARCO 404	ARCO 403
C2	ARCO 402	ARCO 402	ARCO 402
C3	.01	.05	.05
C4	68 f	33	33
C5	33	20 f	20
C6	OMITTED	OMITTED	OMITTED
C7	47	10	6.8
C8	10	10	6.8 p
C9	33 f	20 f	15
L1	.68	.22	COIL - BUFFER
L2	100 Ω RES.	4.7	4.7 f
L3	1.5	.68	.33
L4	22	4.7	4.7
L5	.15	.22 h	.22
L6	4.7	1.5	.68
R1	4.7 K	1.2 K	1.2 K

NOTES—

1. UNLESS OTHERWISE SPECIFIED:
   ALL CAPACITANCE VALUES ARE IN MICROFARADS.
   ALL RESISTANCE VALUES ARE IN OHMS.
2. TRANSISTORS: Q1 & Q2 ARE D32F4 (Q-020).▲
   Q3 IS 2N5128/5129 (Q-010). Q4 & Q5 ARE
   X34A1165 (Q-026).

**DEPENDING ON FREQUENCY, THIS HEAT SINK MAY OR MAY NOT BE INCLUDED.

***OPTIONAL PART: C-046

▲ CAN BE SUBSTITUTED WITH Q-019, 2N5030.

E K PRODUCTS, INC.
3233 W. EULESS BLVD., HURST, TEXAS 76053

SCALE	REVISIONS	BY	DATE
DATE 1/13/72	(1) ADD .005 CAP. OK RYE	RYE	4/21/72
DR'N TAL / CHK'D RZ			
APP'D RZ			

TITLE: PARTS LOCATION RF5 TRANSMITTER

NO. B-633

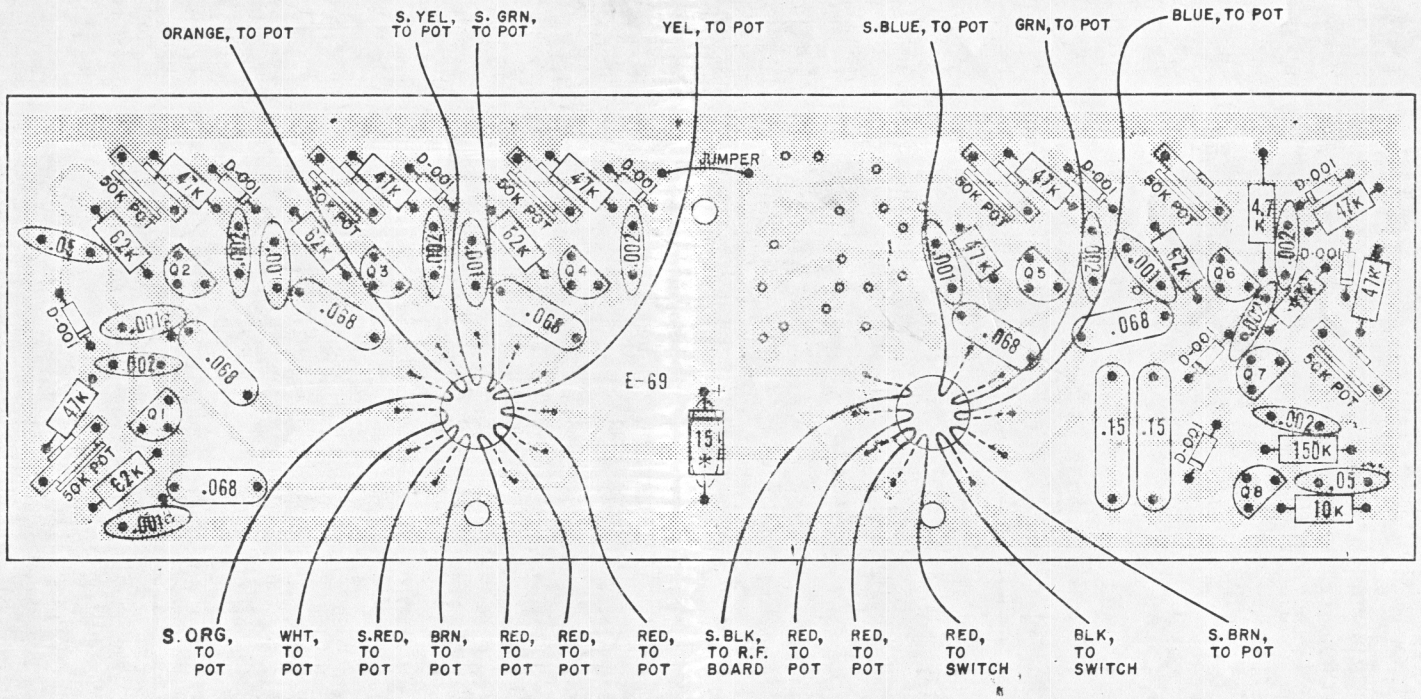

Capacitances in Microfarads
Transistors are:
Diodes: 1N2208

HOBBY LOBBY

5 & 6 CHANNEL ENCODER BOARD TOP VIEW

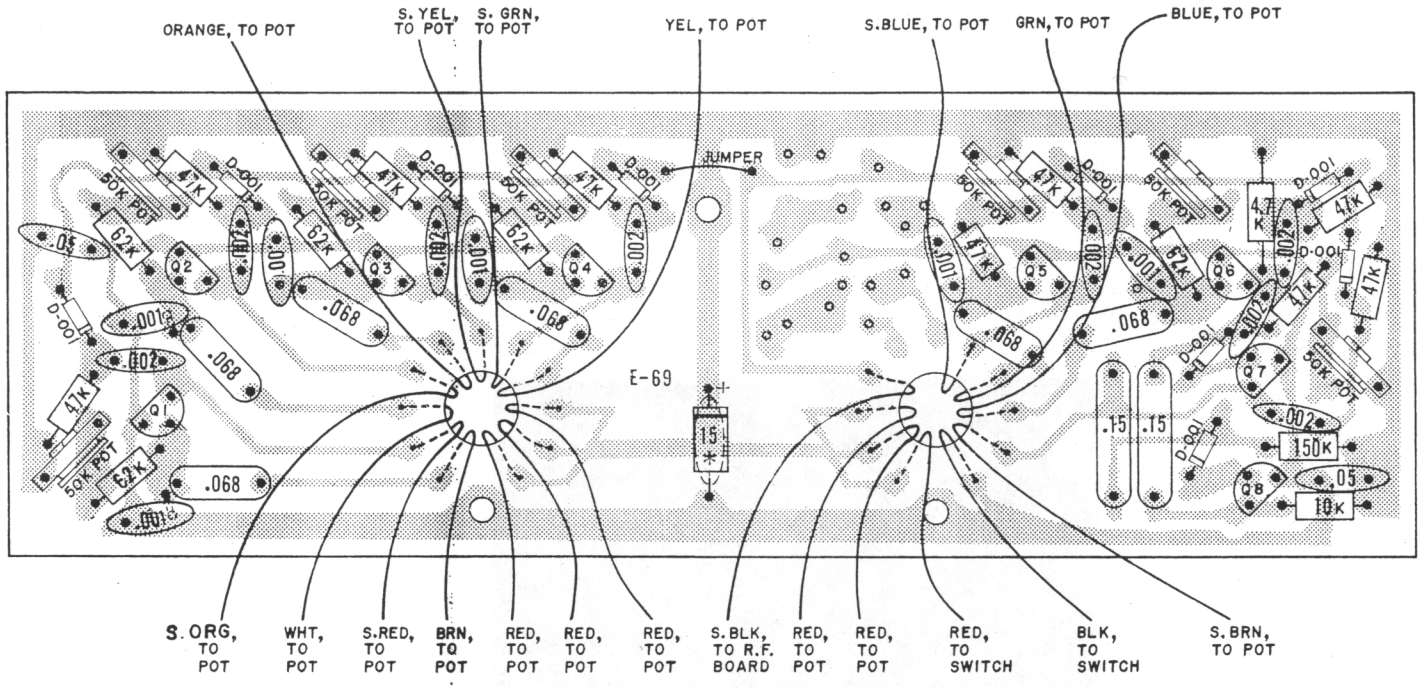

NOTES—

1. UNLESS OTHERWISE SPECIFIED:
   ALL CAPACITANCE VALUES ARE IN MICROFARADS.
   ALL RESISTANCE VALUES ARE IN OHMS.
2. TRANSISTORS: Q1 THRU Q8 ARE X32B4079 (Q-025).
3. DIODES: ALL ARE DA2208(D-001).

*ALTERNATE PART — C-084

E K PRODUCTS, INC.
3233 W. EULESS BLVD., HURST, TEXAS · 76053

SCALE	REVISIONS	BY	DATE
DATE			6-11-73
DR'N TAL / CKD			
AP'VD			

TITLE: PARTS LOCATION: 4-6 CHANNEL ENCODER — LOGICTROL & CHAMPION

NO. B-635

BRUNING 40-105

PARTS LIST FOR PARTS LOCATION: 4-6 CHANNEL 69-71 Pro Series
NEXT ASSEMBLY ENCODER - LOGICTROL AND CHAMPION (70 - 71)

PL- B-635

PART NUMBER	DESCRIPTION	QUANTITY ~~27X~~ 4 ch	~~53X~~ 5 ch	~~12X~~ 6 ch
C-025	.068 ufd	4	5	6
C-026	.15 ufd	2	2	2
C-064	.002 ufd	6	7	8
C-002	.001 ufd	4	5	6
C-001	.05 ufd	2	2	2
C-028	15 ufd 15v	1	1	1
Q-025	32B4079 NPN ENCODER	6	7	8
D-001	DA2208 DIODE	7	8	9
R4-4720	RESISTOR 4.7K	1	1	1
R4-4730	RESISTOR - 47K OHM	7	8	9
R4-1030	RESISTOR - 10K OHM	1	1	1
R4-1540	RESISTOR - 150K OHM	1	1	1
R4-6235	RESISTOR - 62K OHM	3	4	5
R-018	POT - 50K TRIM	5	6	7
E-69 (Not Avail)	PRINTED CIRCUIT BOARD	1	1	1
W-001	Wire - Brown	1	1	1
W-002	Wire - Red	6	6	6
W-000	Wire - Black	1	1	1
W-003	Wire - Orange	1	1	1
W-004	Wire - Yellow	1	1	1
W-005	Wire - Green	1	1	1
W-006	Wire - Blue	1	1	1
W-009	Wire - White	1	1	1
W-090	Wire - S. Black	1	1	1
W-091	Wire - S. Brown	1	1	1
W-092	Wire - S. Red	1	1	1
W-093	Wire - S. Orange	1	1	1
W-094	Wire - S. Yellow	1	1	1
W-095	Wire - S. Green	1	1	1
W-096	Wire - S. Blue	1	1	1

PARTS LIST FOR PARTS LOCATION: 4-6 CHANNEL 69-71 Pro Series

NEXT ASSEMBLY ENCODER - LOGICTROL AND CHAMPION (70 - 71)

PL- B-635

PART NUMBER	DESCRIPTION	QUANTITY ~~27X~~ 4 ch	~~53X~~ 5 ch	~~10X~~ 6 ch
C-025	.068 ufd	4	5	6
C-026	.15 ufd	2	2	2
C-064	.002 ufd	6	7	8
C-002	.001 ufd	4	5	6
C-001	.05 ufd	2	2	2
C-028	15 ufd 15v	1	1	1
Q-025	32B4079 NPN ENCODER	6	7	8
D-001	DA2208 DIODE	7	8	9
R4-4720	RESISTOR 4.7K	1	1	1
R4-4730	RESISTOR - 47K OHM	7	8	9
R4-1030	RESISTOR - 10K OHM	1	1	1
R4-1540	RESISTOR - 150K OHM	1	1	1
R4-6235	RESISTOR - 62K OHM	3	4	5
R-018	POT - 50K TRIM	5	6	7
E-69 (Not Avail)	PRINTED CIRCUIT BOARD	1	1	1
W-001	Wire - Brown	1	1	1
W-002	Wire - Red	6	6	6
W-000	Wire - Black	1	1	1
W-003	Wire - Orange	1	1	1
W-004	Wire - Yellow	1	1	1
W-005	Wire - Green	1	1	1
W-006	Wire - Blue	1	1	1
W-009	Wire - White	1	1	1
W-090	Wire - S. Black	1	1	1
W-091	Wire - S. Brown	1	1	1
W-092	Wire - S. Red	1	1	1
W-093	Wire - S. Orange	1	1	1
W-094	Wire - S. Yellow	1	1	1
W-095	Wire - S. Green	1	1	1
W-096	Wire - S. Blue	1	1	1

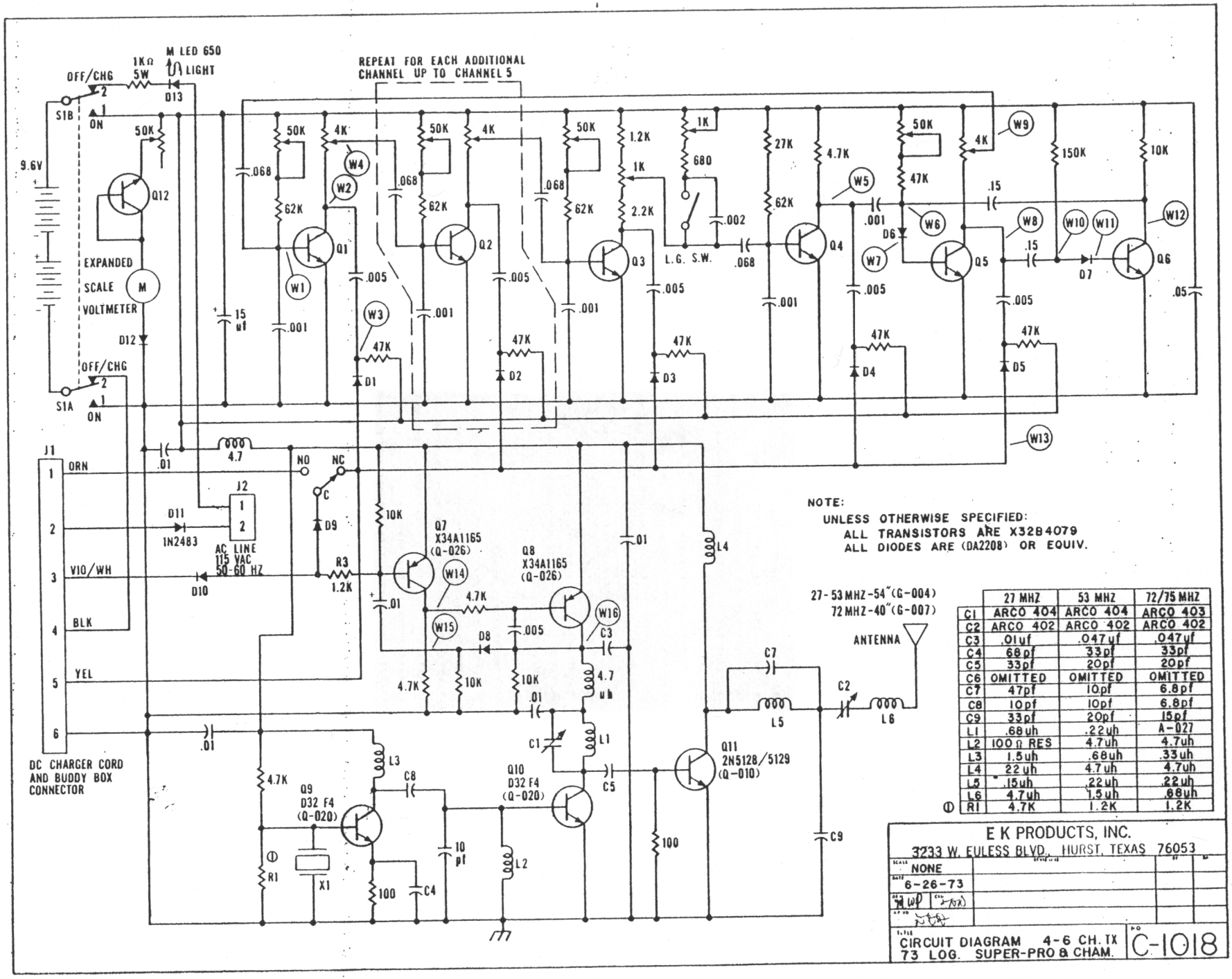

NOTE:
UNLESS OTHERWISE SPECIFIED:
ALL TRANSISTORS ARE X32B4079
ALL DIODES ARE (DA2208) OR EQUIV.

	27 MHZ	53 MHZ	72/75 MHZ
C1	ARCO 404	ARCO 404	ARCO 403
C2	ARCO 402	ARCO 402	ARCO 402
C3	.01uf	.047uf	.047uf
C4	68pf	33pf	33pf
C5	33pf	20pf	20pf
C6	OMITTED	OMITTED	OMITTED
C7	47pf	10pf	6.8pf
C8	10pf	10pf	6.8pf
C9	33pf	20pf	15pf
L1	.68uh	.22uh	A-027
L2	100Ω RES	4.7uh	4.7uh
L3	1.5uh	.68uh	.33uh
L4	22uh	4.7uh	4.7uh
L5	.15uh	.22uh	.22uh
L6	4.7uh	1.5uh	.68uh
① R1	4.7K	1.2K	1.2K

E K PRODUCTS, INC.
3233 W. EULESS BLVD., HURST, TEXAS 76053

SCALE NONE
DATE 6-26-73
DRN WD CKD
APVD
TITLE CIRCUIT DIAGRAM 4-6 CH. TX 73 LOG. SUPER-PRO & CHAM.
NO C-1018

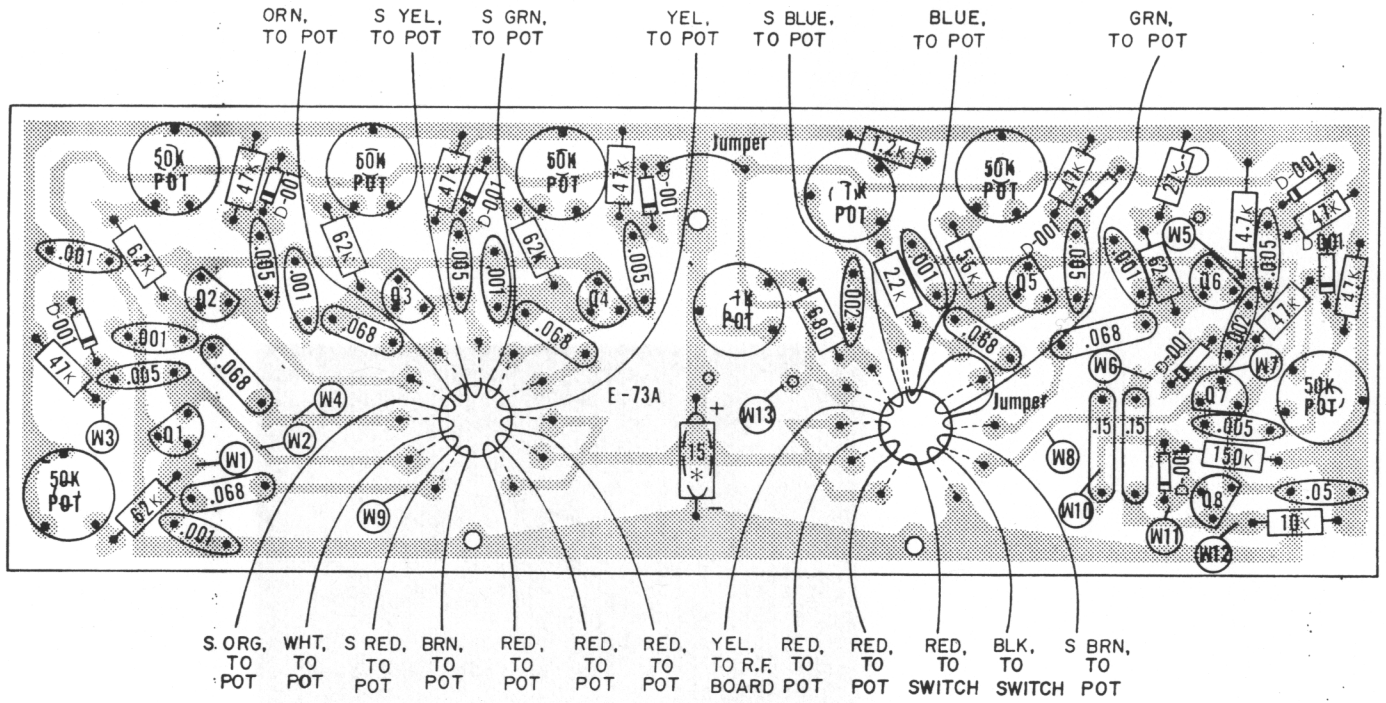

NOTES

1. UNLESS OTHERWISE SPECIFIED:
   ALL CAPACITANCE VALUES ARE IN MICROFARADS.
   ALL RESISTANCE VALUES ARE IN OHMS.
2. TRANSISTORS: Q1 THRU Q8 ARE X32B4079 (Q-025).
3. DIODES: ALL ARE DA2208 (D-001).

*ALTERNATE PART — C-084

E. R. PRODUCTS, INC.
3233 W. EULESS BLVD., HURST, TEXAS 76053

SCALE	REVISIONS	BY	DATE
DATE 6-15-73			
DR'N MWP / CKD	ADD		
AP'VD			

TITLE: PARTS LOCATAION: 6 CH. ENCODER LOG-CHAMPION & LOG. SUPER PRO

NO. B-654

BRUNING 40-105

PARTS LIST FOR NEXT ASSEMBLY	PARTS LIST: 6 CHANNEL ENCODER LOG - CHAMPION AND LOG. SUPER PRO (72,73)	PL- B-654

PART NUMBER	DESCRIPTION	0 ALL	33	2
C-001	.05ufd	1		
C-002	.001ufd	7		
C-025	.068ufd	6		
C-026	.15ufd	2		
C-028	15ufd 15v	1		
C-037	.005ufd	7		
C-064	.002ufd	2		
D-001	DA2208 Diode	9		
Q-025	32B4079 NPN Transistor	8		
R-018	on Earlier Models Only	6		
R-019	Pot - 50K Trim	6		
R-020	Pot - 1K Trim	2		
R4-1030	Resistor - 10K OHM	1		
R4-1220	Resistor - 1.2K OHM	1		
R4-1540	Resistor - 150K OHM	1		
R4-2220	Resistor - 2.2K OHM	1		
R4-2730	Resistor - 27K OHM	1		
R4-4720	Resistor - 4.7K OHM	1		
R4-4730	Resistor - 47K OHM	8		
R4-6810	Resistor - 680 OHM	6		
W-000	Wire - Black	1		
W-001	Wire - Brown	1		
W-002	Wire - Red	6		
W-003	Wire - Orange	1		
W-004	Wire - Yellow	2		
W-005	Wire - Green	1		
W-006	Wire - Blue	1		
W-009	Wire - White	1		
W-091	Wire - S. Brown	1		
W-092	Wire - S. Red	1		
W-093	Wire - S. Orange	1		
W-094	Wire - S. Yellow	1		
W-095	Wire - S. Green	1		
W-096	Wire - S. Blue	1		
PC-XXX	Printed Circuit Board	1		

W-C-1018
WAVE FORMS

1973 CHAMP. AND SUPER PRO TRANSMITTER REFERENCE DRAWINGS - C-1018, B-654, B-656

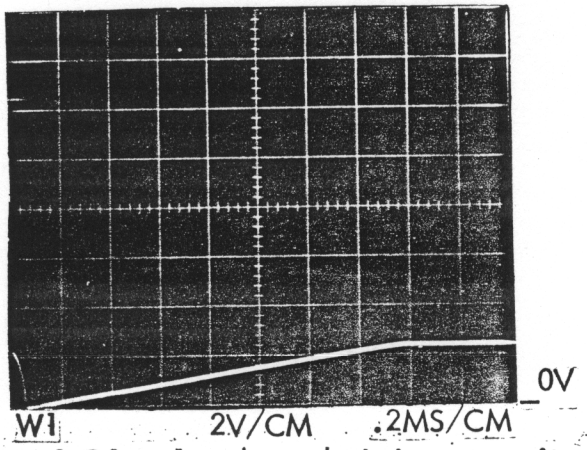

Base of Q1 - 1st channel timing capacitor (.068 mfd) discharge curve.

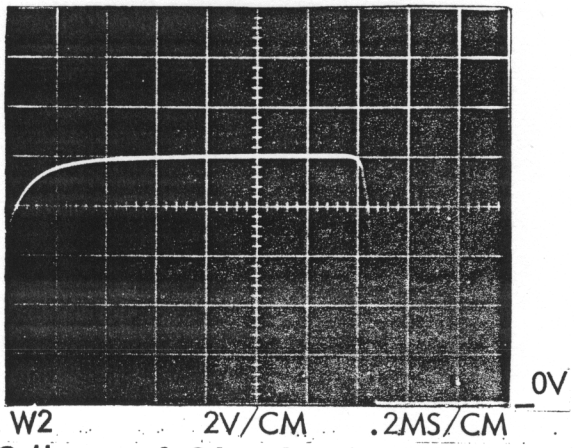

Collector of Q1 - 1st channel Encoder pulse.

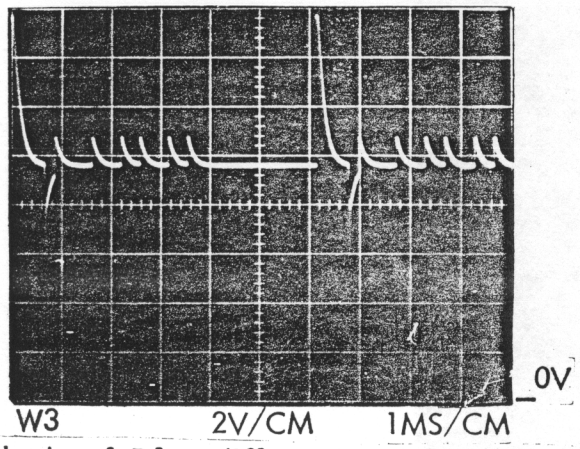

Cathode of D1 - differentiated 1st channel pulse.

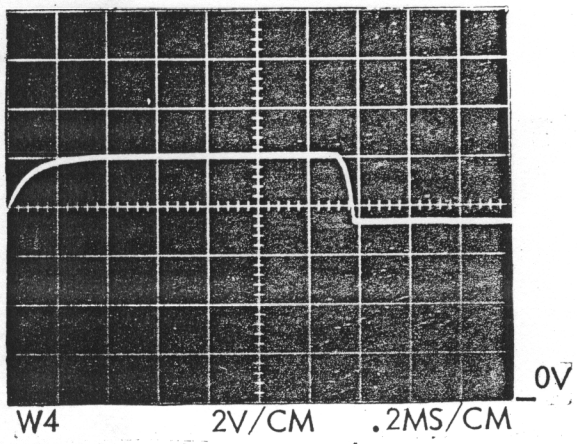

2nd channel trigger pulse.

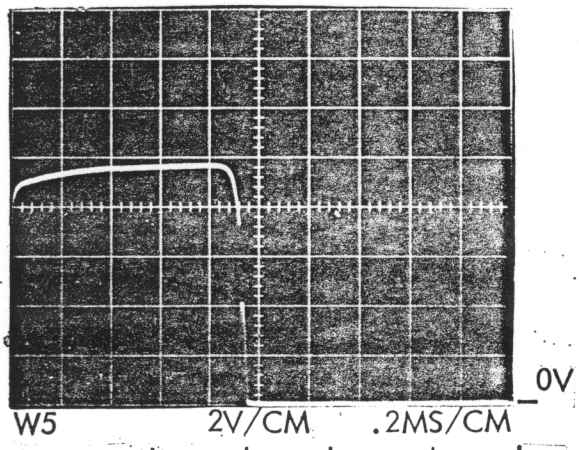

Last auxiliary channel encoder pulse.

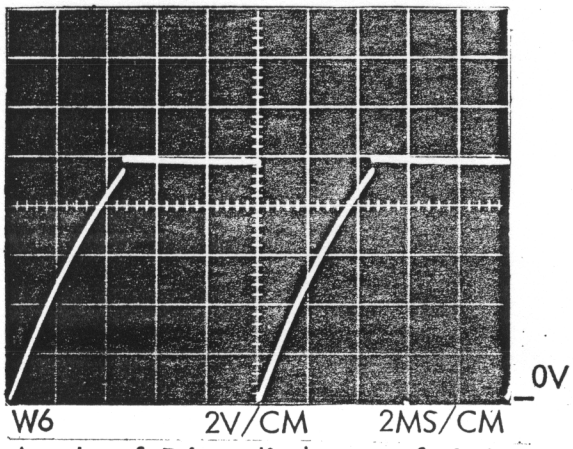

Anode of D6 - discharge of timing capacitor (.15 mfd) connected to collector of Q6.

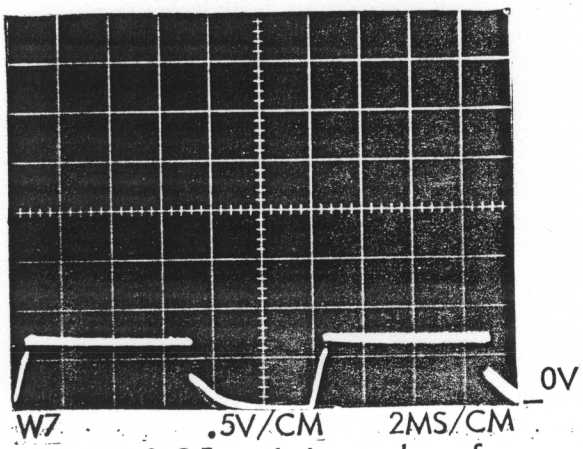

Base of Q5 - timing pulse of reset circuit.

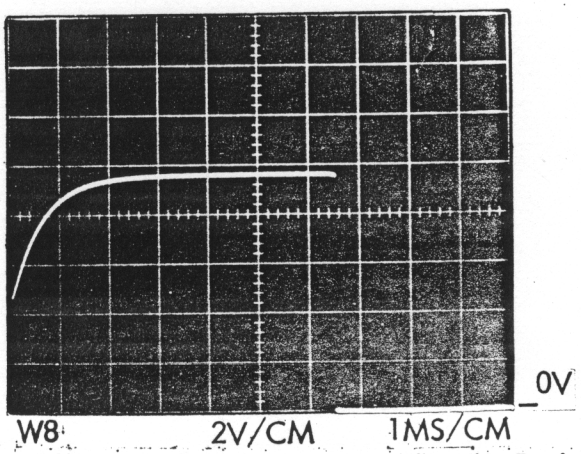

Collector of Q5 - reset pulse (6.5ms).

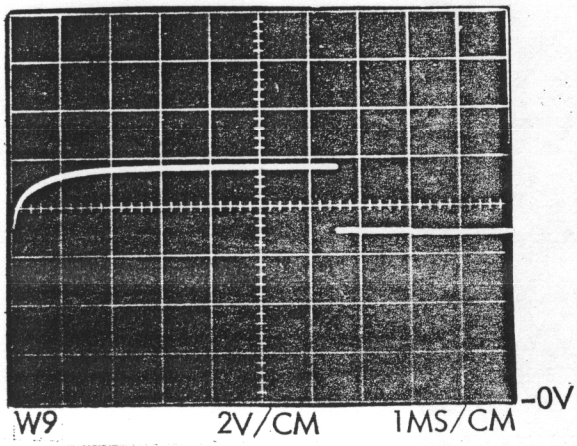

1st Channel trigger pulse

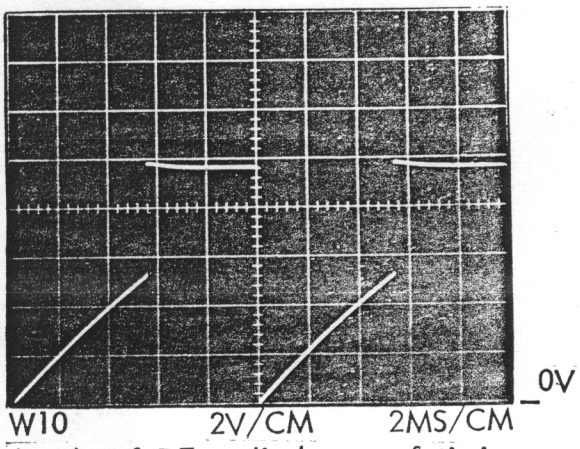

Anode of D7 - discharge of timing capacitor (.15 mfd) connected to collector of Q5.

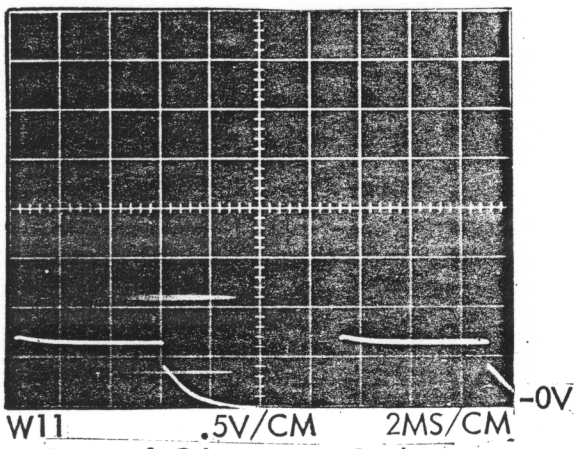

Base of Q6 - timing pulse.

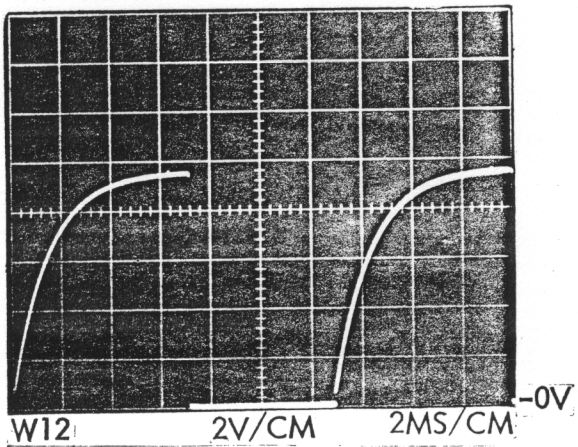

Collector of Q6 - complementary timing pulse of reset circuit.

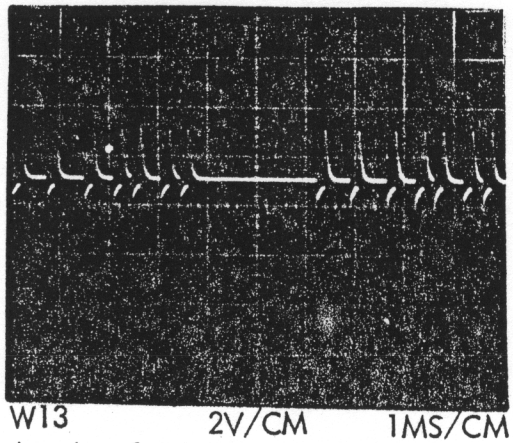

-0V

W13 2V/CM 1MS/CM

Anode of D1-D5, OR gate signal line.

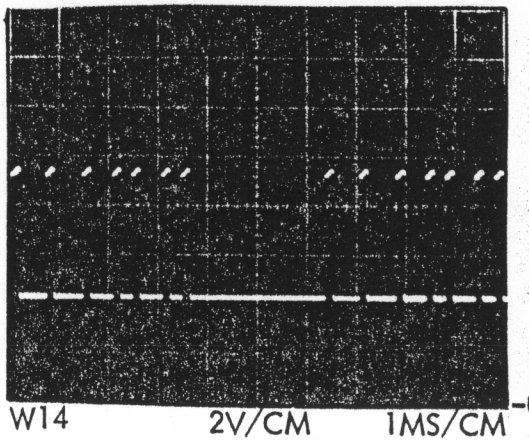

-0V

W14 2V/CM 1MS/CM

Collector of Q7 - one shot on-time (approx. 200 M. Sec.)

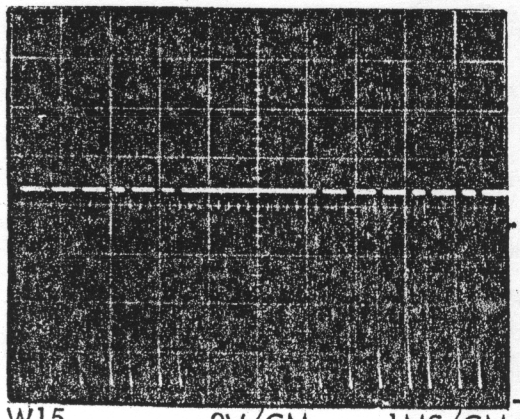

-0V

W15 2V/CM 1MS/CM

Cathode of Steering diode D8

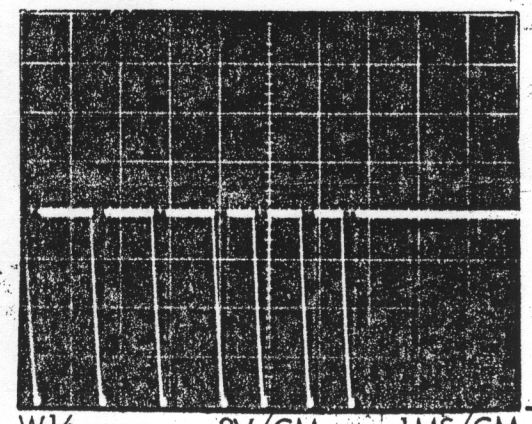

-0V

W16 2V/CM 1MS/CM

Collector of Q8 - output of one shot to buffer stage.

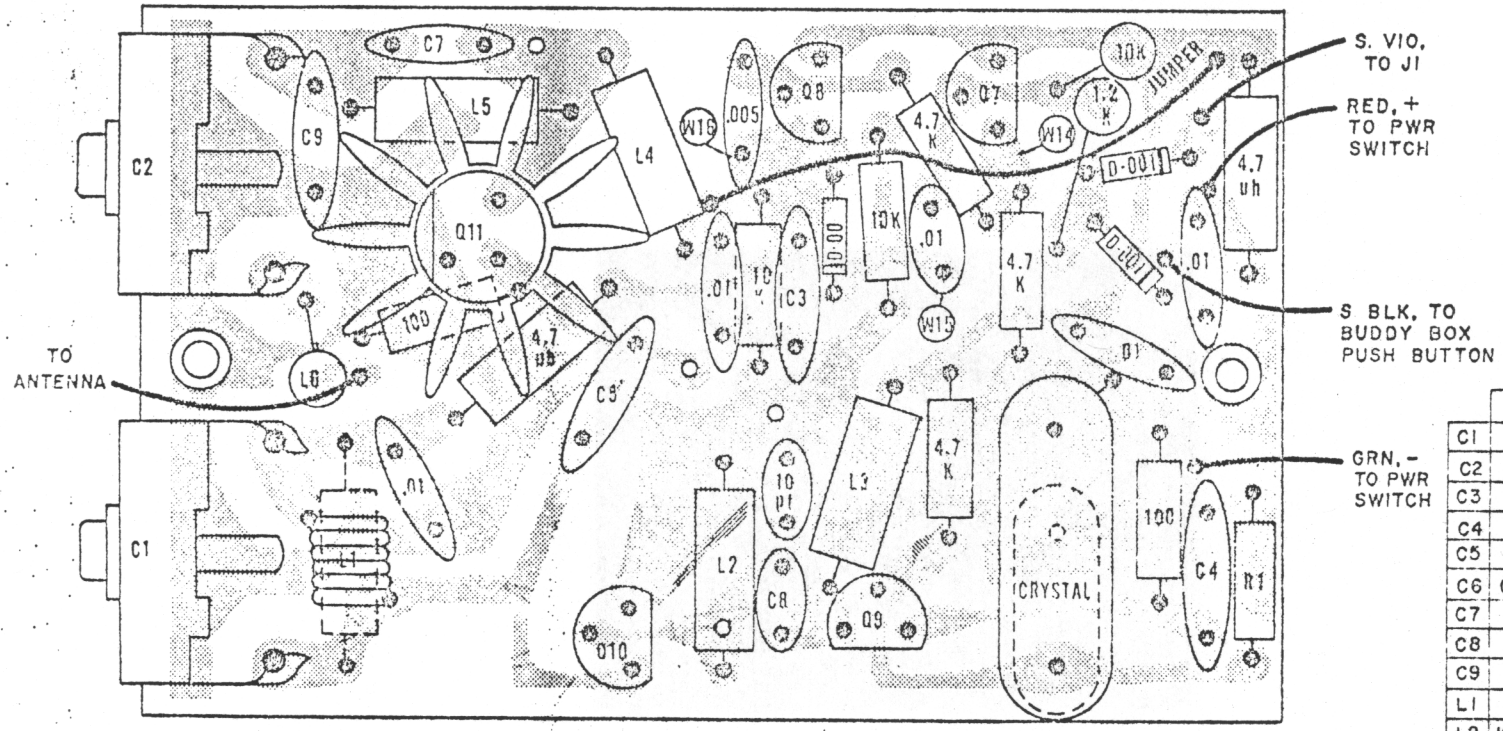

	27 mHz	53 mHz	72 mHz
C1	ARCO 404	ARCO 404	ARCO 403
C2	ARCO 402	ARCO 402	ARCO 402
C3	.01 uf	.05 uf	.05 uf
C4	68 pf	33 pf	33 pf
C5	33 pf	20 pf	20 pf
C6	OMITTED	OMITTED	OMITTED
C7	47 pf	10 pf	6.8 pf
C8	10 pf	10 pf	6.8 pf
C9	33 pf	20 pf	15 pf
L1	.68 uh	.22 uh	COIL-BUFFER
L2	100 Ω RES	4.7 uh	4.7 uh
L3	1.5 uh	.68 uh	.33 uh
L4	22 uh	4.7 uh	4.7 uh
L5	.15 uh	.22 uh	.22 uh
L6	4.7 uh	1.5 uh	.68 uh
R1	4.7 K	1.2 K	1.2 K

NOTES:

1. UNLESS OTHERWISE SPECIFIED:

   ALL CAPACITANCE VALUES ARE IN MICROFARADS.
   ALL RESISTANCE VALUES ARE IN OHMS.

2. TRANSISTORS: Q9 & Q10 ARE D32 F4 (Q-020). Q11 IS 2N5128/5129 (Q-010). Q7 & Q8 ARE X34A1165 (Q-026).

3. HEAT SINK FINS BENT TO CLEAR CONTROL STICK TRIM LEVER.

E K PRODUCTS, INC.
7233 W. EULESS BLVD., HURST, TEXAS 76053

SCALE	REVISIONS		DATE
DATE 6-22-73	ADDED CHECK POINTS	LDD	12-2-73
DR'N	CHK'D		
APV'D			

TITLE: PARTS LOCATION RF 73A TRANSMITTER

NO. B-656

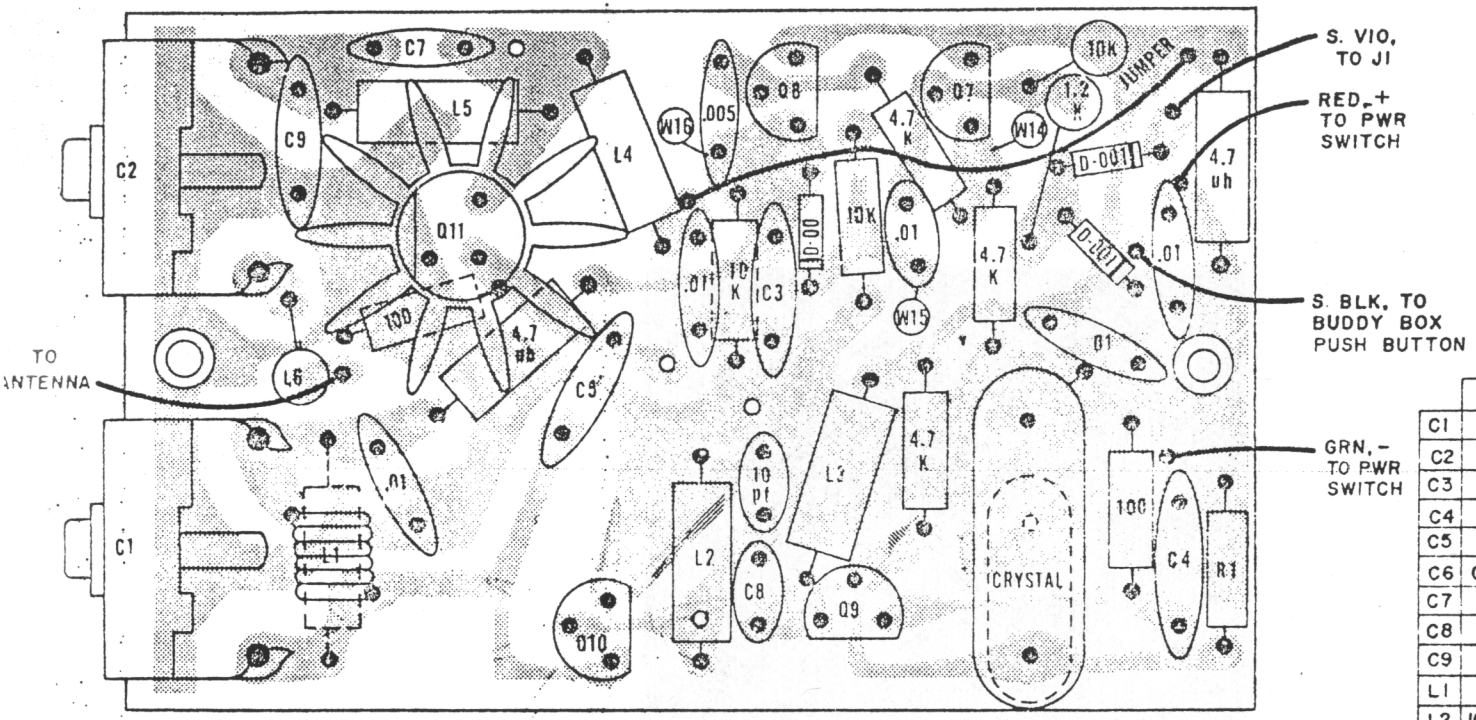

	27 mHz	53 mHz	72 mHz
C1	ARCO 404	ARCO 404	ARCO 403
C2	ARCO 402	ARCO 402	ARCO 402
C3	.01 uf	.05 uf	.05 uf
C4	68 pf	33 pf	33 pf
C5	33 pf	20 pf	20 pf
C6	OMITTED	OMITTED	OMITTED
C7	47 pf	10 pf	6.8 pf
C8	10 pf	10 pf	6.8 pf
C9	33 pf	20 pf	15 pf
L1	.68 uh	.22 uh	COIL-BUFFER
L2	100 Ω RES	4.7 uh	4.7 uh
L3	1.5 uh	.68 uh	.33 uh
L4	22 uh	4.7 uh	4.7 uh
L5	.15 uh	.22 uh	.22 uh
L6	4.7 uh	1.5 uh	.68 uh
R1	4.7 K	1.2 K	1.2 K

NOTES:

1. UNLESS OTHERWISE SPECIFIED:
   ALL CAPACITANCE VALUES ARE IN MICROFARADS.
   ALL RESISTANCE VALUES ARE IN OHMS.
2. TRANSISTORS: Q9 & Q10 ARE D32 F4 (Q-020). Q11 IS 2N5128/5129 (Q-010). Q7 & Q8 ARE X34A1165 (Q-026).
3. HEAT SINK FINS BENT TO CLEAR CONTROL STICK TRIM LEVER.

E K PRODUCTS, INC.
1233 W. EULESS BLVD., HURST, TEXAS 76053

SCALE	REVISIONS	BY	DATE
DATE 6-22-73	ADDED CHECK POINTS	DD	12-25-73
DR'N			
APVD			

TITLE: PARTS LOCATION RF 73A TRANSMITTER

NO B-656

PARTS LIST FOR 1973 CHAMPION AND SUPER PRO
NEXT ASSEMBLY R. F. 73A TRANSMITTER

PL.- B-656

PART NUMBER	DESCRIPTION	C 27	C 54
A-027	Buffer Coil	-	-
C-001	.05 uf Cap.	-	1
C-010	20 pfd Cap.	-	2
C-011	33 pfd Cap.	2	1
C-017	.01 ufd Cap.	5	4
C-019	6.8 pfd Cap.	-	-
C-031	68 pfd Cap.	1	-
C-032	10 pfd Cap.	2	3
C-037	.005 ufd Cap.	1	1
C-042	15 pfd Cap.	-	-
C-043	ARCO 402	1	1
C-044	ARCO 403	-	-
C-045	ARCO 404	1	1
C-046	.01 ufd Mylar Cap.	1	1
C-048	47 pfd Cap.	1	-
D-001	DA2208 Diode	3	3
L-005	Choke 33 uh	-	-
L-008	Choke 4.7 uh	3	4
L-009	Choke .22uh	1	2
L-007	Choke .68 uh	1	1
L-010	Choke .15 uh	1	1
L-012	Choke 1.5 uh	1	-
Q-010	Transistor 2N5128/5129	1	1
Q-020	Transistor D32F4	2	2
Q-026	Transistor X34A1165	2	2
R4-1010	Resistor 100 OHM	3	2
R4-1030	Resistor 10K OHM	3	3
R4-1220	Resistor 1.2K OHM	1	2
R4-4720	Resistor 4.7k OHM	4	3
2	Heat Sink	1	1
5	Standoff #2 56x1/8	2	2
030	Copper Rivets	4	4
W-002	Wire - Red " long	1	1
005	Wire - Green " Long	1	1
90	Wire - S. Black " Long	1	1
92	Wire - S. Purple " Long	1	1
095	Wire - S. Green " Long	1	1
W-097	Wire - S. Red. " Long	1	1
X-002A-E	27 mHz Transmitter Crystal	1	0
X-004A-F	53 mHz Transmitter Crystal	0	1
X-006A-G	72 mHz Transmitter Crystal	0	0
PC-XXX	Printed Circuit Board	1	1

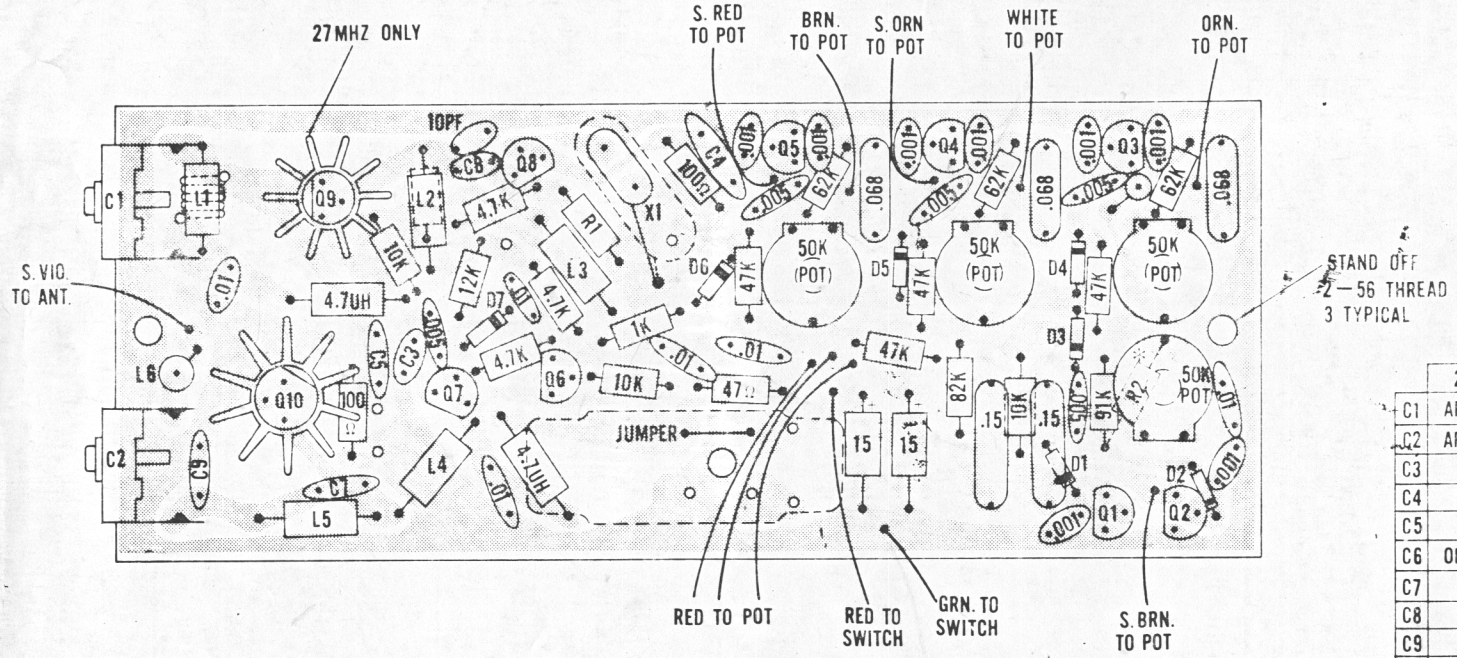

	27 MHZ	53 MHZ	72 MHZ
C1	ARCO 404	ARCO 404	ARCO 403
C2	ARCO 402	ARCO 402	ARCO 402
C3	.01	.05	.05
C4	68PF	33PF	33PF
C5	33PF	20PF	20PF
C6	OMITTED	OMITTED	OMITTED
C7	47PF	10PF	6.8PF
C8	10PF	10PF	6.8PF
C9	33PF	20PF	15 PF
L1	.68UH	.22 JH	COIL — BUFFER
L2	100Ω RES.	4.7UH	4.7UH
L3	1.5UH	.68UH	.33UH
L4	22 UH	4.7U	4.7UH
L5	.15 UH	.22 UH	.22 UH
L6	4.7UH	1.5UH	.68UH
R1	4.7K	1.2K	1.2K

NOTES:

1. UNLESS O HERWISE SPECIFIED:
   ALL CAPACITANCE VALUES ARE IN MICROFARADS.
   ALL RESISTANCE VALUES ARE IN OHMS.
2. TRANSISTORS: Q1 THRU Q5 ARE X32B4079 (Q-025). Q6 AND Q7 ARE X34A1165 (Q-026). Q8 AND Q9 ARE D32F4 (Q-020). Q10 IS 2N5128/5129 (Q-010).
3. DIODES: D1 THRU D7 ARE DA2208 (D-001).

*WHEN R2 RESISTOR IS IN, 91K RESISTOR AND 50K POT ARE TAKEN OUT

R2 MAY RANGE IN VALUE FROM 43K TO 62KΩ

Note: Some Models 91K is 43K

HOBBY LOBBY 3 CHANNEL TRANSMITTER

BRUNING 40-105

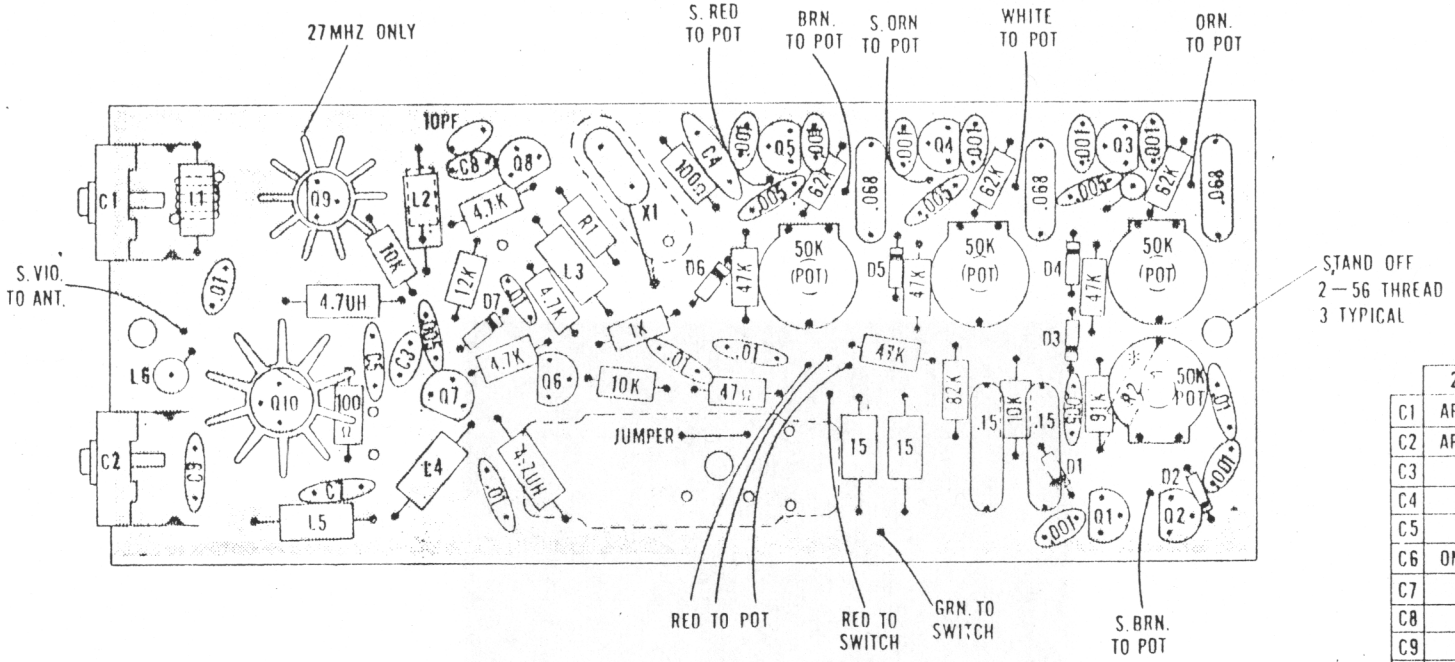

	27MHZ	53MHZ	72MHZ
C1	ARCO 404	ARCO 404	ARCO 403
C2	ARCO 402	ARCO 402	ARCO 402
C3	.01	05	.05
C4	68PF	33PF	33PF
C5	33PF	20PF	20PF
C6	OMITTED	OMITTED	OMITTED
C7	47PF	10PF	6.8PF
C8	10PF	10PF	6.8PF
C9	33PF	20PF	15 PF
L1	.68UH	.22 JH	COIL—BUFFER
L2	100Ω RES.	4.7UH	4.7UH
L3	1.5UH	.68UH	.33UH
L4	22 UH	4.7UH	4.7UH
L5	.15 UH	.22UH	.22UH
L6	4.7UH	1.5UH	.68UH
R1	4.7K	1.2K	1.2K

NOTES:

1. UNLESS O HERWISE SPECIFIED:
   ALL CAPACITANCE VALUES ARE IN MICROFARADS.
   ALL RESISTANCE VALUES ARE IN OHMS.
2. TRANSISTORS: Q1 THRU Q5 ARE X32B4079 (Q-025). Q6 AND Q7 ARE X34A1165 (Q-026). Q8 AND Q9 ARE D32F4 (Q-020). Q10 IS 2N5128/5129 (Q-010).
3. DIODES: D1 THRU D7 ARE DA2208 (D-001).

*WHEN R2 RESISTOR IS IN, 91K RESISTOR AND 50K POT ARE TAKEN OUT

R2 MAY RANGE IN VALUE FROM 43K TO 62KΩ

E K PRODUCTS, INC.
3233 W. EULESS BLVD., HURST, TEXAS 76053

SCALE 2T01	REVISIONS	BY	DATE
DATE 9-6-73	CHANGED 91K to 43K	MWP	10-26-73
DR MWP CHK	REVISED: R1 POSITION, R2 NOTE	BC	8-23-74
APVD			

TITLE PARTS LOCATION RANGER XMTR

NO B-666

BRUNING 40-105

PARTS LIST FOR RANGER TRANSMITTER

NEXT ASSEMBLY

PL- B-666

PART NUMBER	DESCRIPTION	QUANTITY 27	53	72
C-002	.001 uf CAPACITOR	8	8	8
C-010	20 pf "	0	2	1
C-011	33 pf "	2	1	1
C-017	.01 uf "	6	5	5
C-028	15 uf "	2	2	2
C-025	.068 uf Mylar "	3	3	3
C-026	.15 uf " "	2	2	2
C-037	.005 uf "	5	5	5
C-001	.05 uf "	0	1	1
C-032	10 pf "	2	3	1
C-042	15 pf "	0	0	1
C-048	47 pf "	1	0	0
C-031	68 pf "	1	0	0
C-073	6.8 pf "	0	0	2
C-046	.01 uf Mylar "	1	1	1
C-043	402 TRIM CAPACITOR	1	1	1
C-044	403 TRIM CAPACITOR	0	0	1
C-045	404 TRIM CAPACITOR	1	1	0
D-001	DA2208 DIODE	7	7	7
Q-025	X32B4079 TRANSISTOR	5	5	5
Q-026	X34A1165 "	2	2	2
Q-020	D32F4 "	2	2	2
Q-010	2N5128/5129 "	1	1	1
X-002A-E	CRYSTAL	1	0	0
X-004A - F	CRYSTAL	0	1	0
X-006A - G	CRYSTAL	0	0	1
A-027	COIL - BUFFER	0	0	1
L-002	22 uh CHOKE	1	0	0
L-005	.33 uh CHOKE	0	0	1
L-007	.68 uh CHOKE	1	1	1
L-008	4.7 uh CHOKE	1	2	2
L-009	.22 uh CHOKE	0	2	1
L-010	.15 uh CHOKE	1	0	0
L-012	1.5 uh CHOKE	1	1	0
R-018	50K pot	4	4	4
R4-1010	100 Ω RESISTOR	3	2	2
R4-1020	1K Ω "	1	1	1
R4-1030	10K Ω "	3	3	3
R4-1220	1.2K Ω "	0	1	1
R4-1230	12K Ω "	1	1	1
R4-4720	4.7K Ω "	5	4	4
R4-4330	43K Ω "	1	1	1
R4-4730	47K Ω "	4	4	4
R4-4710	47 Ω "	1	1	1
R4-6235	62K Ω "	3	3	3
R4-8230	82K Ω "	1	1	1

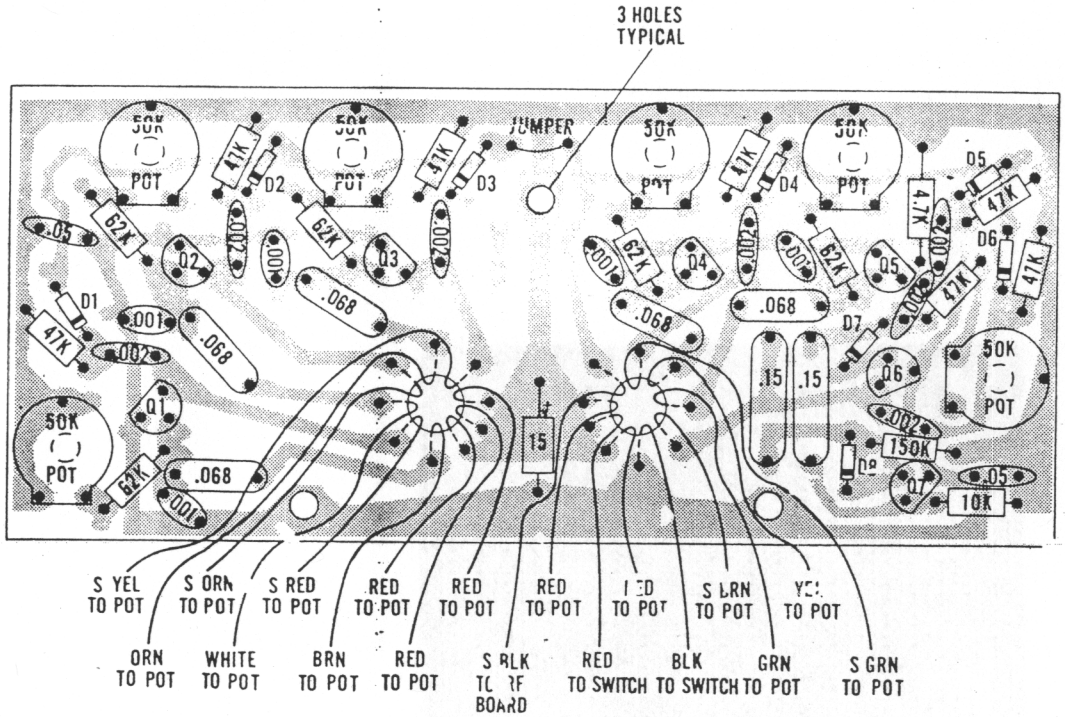

NOTES:

1. UNLESS OTHERWISE SPECIFIED:
   ALL CAPACITANCE VALUES ARE IN MICROFARADS.
   ALL RESISTANCE VALUES ARE IN OHMS.
2. TRANSISTORS: Q1 THRU Q7 ARE X32B4079 (Q-025).
3. DIODES: D1 THRU D8 ARE DA2208 (D-001).

CONTROL STICK AND AUXILLARY CONTROL POT WIRING

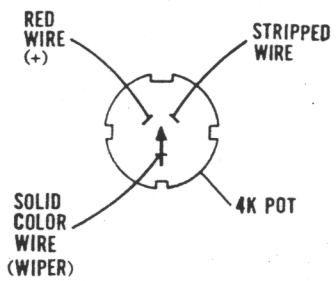

E K PRODUCTS, INC.
3233 W. EULESS BLVD., HURST, TEXAS 76053

SCALE 2 TO 1	REVISIONS	BY	DATE
DATE 9-14-73			
DR'N MWP CKD.			
APP'VD.			

TITLE
PARTS LOCATION: 74 CHAMPION XMTR
5 CHANNEL ENCODER BOARD

NO. B-667

PARTS LIST FOR NEXT ASSEMBLY: 74 Champion XMTR / 5 Channel Encoder Board

PL- B-667

PART NUMBER	DESCRIPTION		ALL
C-001	.05 uf capacitor		2
C-002	.001 uf capacitor		5
C-025	.068 uf capacitor		5
C-026	.15 uf capacitor		2
C-028	15 uf capacitor		1
C-064	.002 uf capacitor		7
D-001	DA2208 Diode		8
Q-025	X32B4079 Transistor		7
R-019	Pot 50K Trim		6
R4-1030	10K OHM Resistor		1
R4-1540	150K OHM Resistor		1
R4-4720	4.7K OHM Resistor		1
R4-4730	47K OHM Resistor		7
R4-6235	62K OHM Resistor		5
W-000	Wire - Black		1
W-001	Wire - Brown		1
W-002	Wire - Red		6
W-003	Wire - Orange		1
W-004	Wire - Yellow		1
W-005	Wire - Green		1
W-009	Wire - White		1
W-090	Wire - S. Black		1
W-091	Wire - S. Brown		1
W-092	Wire - S. Red		1
W-093	Wire - S. Orange		1
W-094	Wire - S. Yellow		1
W-095	Wire - S. Green		1

PARTS LIST FOR 74 Super - Pro XMTR
NEXT ASSEMBLY 7 Channel Encoder Board

PL- B-668

PART NUMBER	DESCRIPTION		ALL
C-001	.05 uf Capacitor		1
C-002	.001uf Capacitor		8
C-025	.068 uf Capacitor		7
C-026	.15 uf Capacitor		2
C-028	15 uf Capacitor		1
C-037	.005 uf Capacitor		8
C-064	.002 uf Capacitor		1
D-001	DA2208 Diode		10
R-019	Pot - 50K Trim		8
R4-1030	10K OHM Resistor		1
R4-1540	150K OHM Resistor		1
R4-4720	4.7K OHM Resistor		1
R4-4730	47K OHM Resistor		9
R4-6235	62K OHM Resistor		7
W-000	Wire - Black		1
W-001	Wire - Brown		1
W-002	Wire - Red		8
W-003	Wire - Orange		1
W-004	Wire - Yellow		1
W-005	Wire - Green		1
W-006	Wire - Blue		1
W-007	Wire - Purple		1
W-009	Wire - White		1
W-090	Wire - S. Black		1
W-091	Wire - S. Brown		1
W-092	Wire - S. Red		1
W-093	Wire - S. Orange		1
W-094	Wire - S. Yellow		1
W-095	Wire - S. Green		1
W-096	Wire - S. Blue		1
W-097	Wire - S. Purple		1
Q-025	X32B4079 Transistor		9

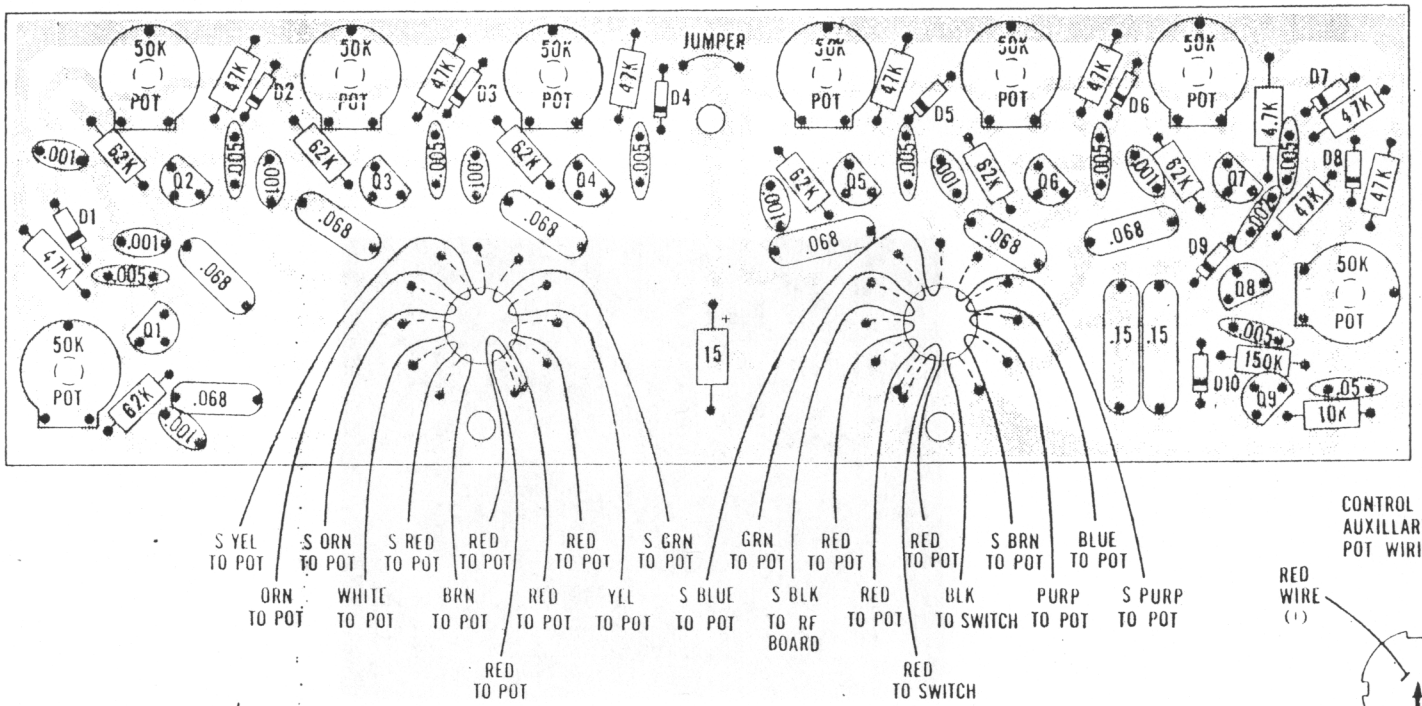

CONTROL STICK AND AUXILLARY CONTROL POT WIRING

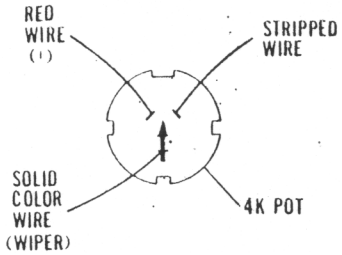

NOTES:

1. UNLESS OTHERWISE SPECIFIED.
   ALL CAPACITANCE VALUES ARE IN MICROFARADS.
   ALL RESISTANCE VALUES ARE IN OHMS.
2. TRANSISTORS: Q1 THRU Q9 ARE X32B4079 (Q-025).
3. DIODES: D1 THRU D10 ARE DA2208 (D-001).

E K PRODUCTS, INC.
3233 W EULESS BLVD., HURST, TEXAS 76053

SCALE 2 TO 1	REVISIONS	BY	DATE
DATE 9-19-73			
DR MWP CHKD			
APVD			
TITLE PARTS LOCATION: 74 SUPER-PRO XMTR 7 CHANNEL ENCODER BOARD		NO B-668	

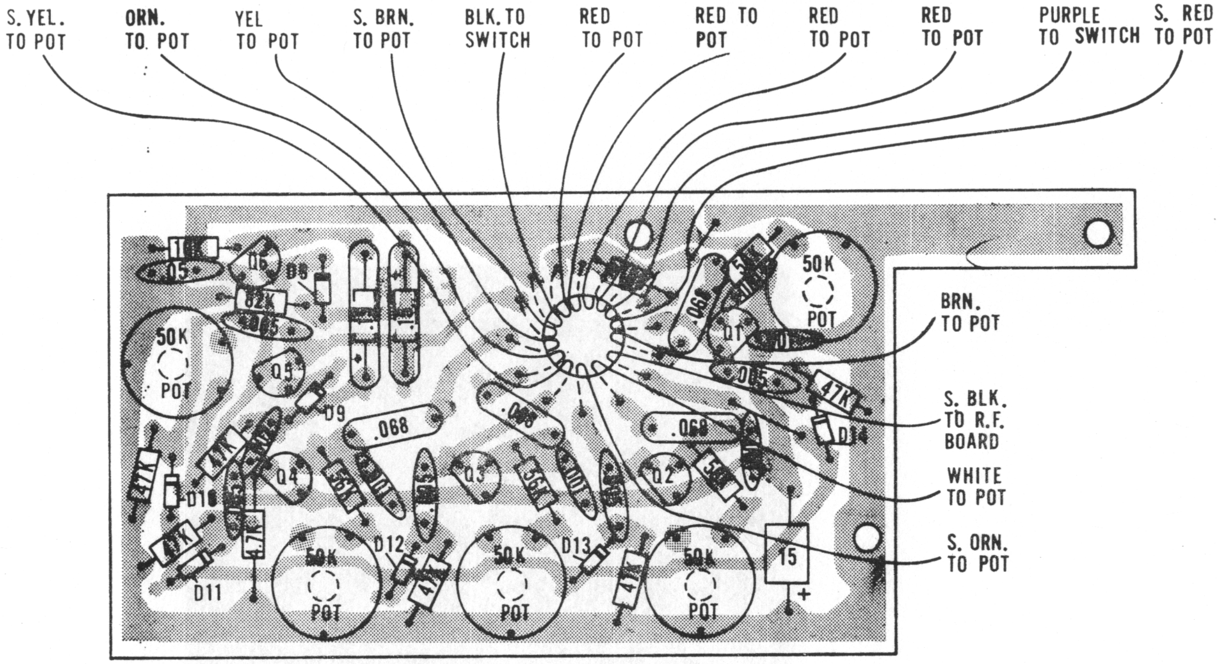

NOTES:

1. UNLESS OTHERWISE SPECIFIED:
   ALL CAPACITANCE VALUES ARE IN MICROFARADS.
   ALL RESISTANCE VALUES ARE IN OHMS.
2. TRANSISTORS Q1 THRU Q6 ARE X32B4079 (Q-025) ALL.
3. DIODES D8 THRU D14 ARE DA2208 (D-001) ALL.

E K PRODUCTS, INC.
3233 W. EULESS BLVD., HURST, TEXAS 76053

SCALE NONE	REVISIONS	BY	DATE
DATE 12-28-73	Wiring color sequence to match 74' systems		12-30
DR'N LDD CKD			
AP VD.			

TITLE PARTS LOCATION: LRB – 74 ENCODER 4 CHANNEL

NO. B-671

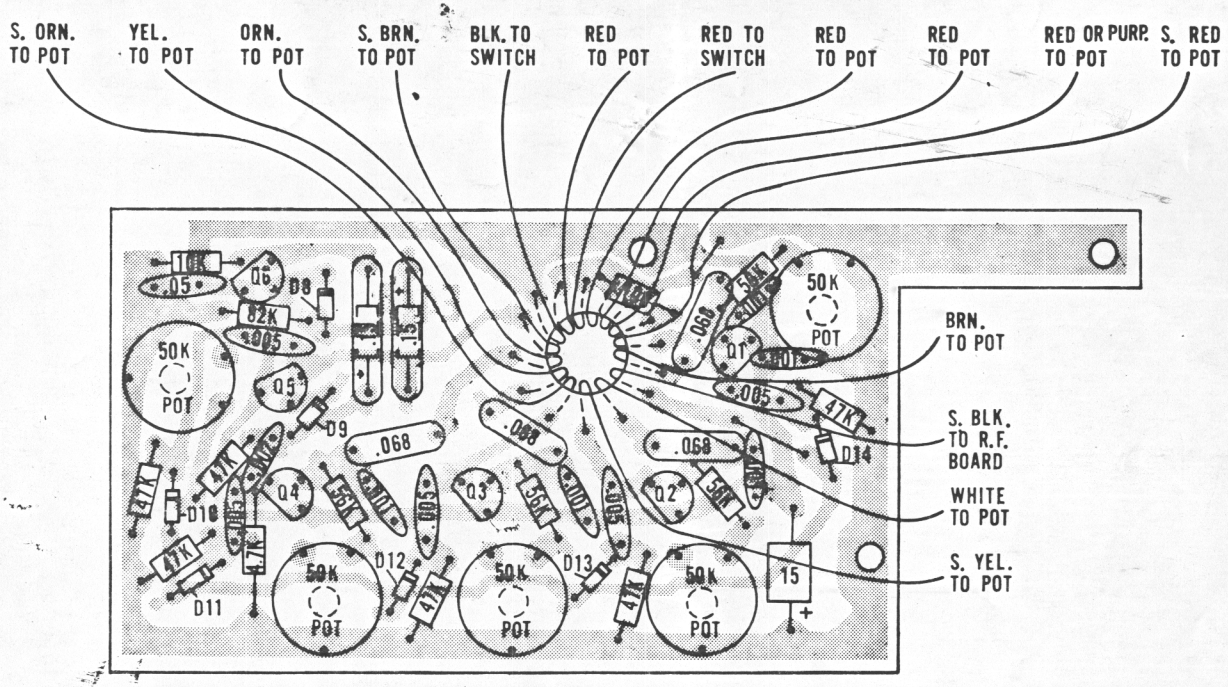

NOTES:

1. UNLESS OTHERWISE SPECIFIED:
   ALL CAPACITANCE VALUES ARE IN MICROFARADS.
   ALL RESISTANCE VALUES ARE IN OHMS.
2. TRANSISTORS Q1 THRU Q6 ARE X32B4079 (Q-025) ALL.
3. DIODES D8 THRU D14 ARE DA2208 (D-001) ALL.

HOBBY LOBBY 4 CHANNEL ENCODER

PARTS LIST FOR NEXT ASSEMBLY: 1974 LRB 4 Channel Encoder

PL:- B-671

PART NUMBER	DESCRIPTION		ALL
C-001	.05 uf Capacitor		1
C-002	.001uf Capacitor		5
C-025	.068 uf Capacitor		4
C-026	.15 uf Capacitor		2
C-028	15 UF Capacitor		1
C-037	.005 uf Capacitor		5
C-064	.002uf Capacitor		1
D-001	DA2208 Diode		7
Q-025	X32B4079 NPN Encoder Transistor		6
R-019	Pot 50K Trim - Spain		5
R4-1010	100OHM Resistor		1
R4-1030	10K OHM Resistor		1
R4-4720	4.7K OHM Resistor		1
R4-4730	47K OHM Resistor		6
R4-5630	56K OHM Resistor		4
R4-8230	82K OHM Resistor		1
W-000	Wire - Black		1
W-001	Wire - Brown		1
W-002	Wire - Red		5
W-003	Wire - Orange		1
W-004	Wire - Yellow		1
W-007	Wire - Purple (alternate for W-002)		1
W-009	Wire - White		1
W-090	Wire - S. Black		1
W-091	Wire - S. Brown		1
W-092	Wire - S. Red		1
W-093	Wire - S. Orange		1
W-094	Wire - S. Yellow		1

Ⓐ ORN.
TO POT

Ⓑ S. ORN.
TO POT

Ⓒ WHITE
TO POT

Ⓓ S. BLK.
TO R.F.
BOARD

Ⓔ BRN.
TO POT

Ⓕ S. RED
TO POT

Ⓖ PURPLE
TO SWITCH

Ⓗ RED
TO POT

Ⓘ RED
TO POT

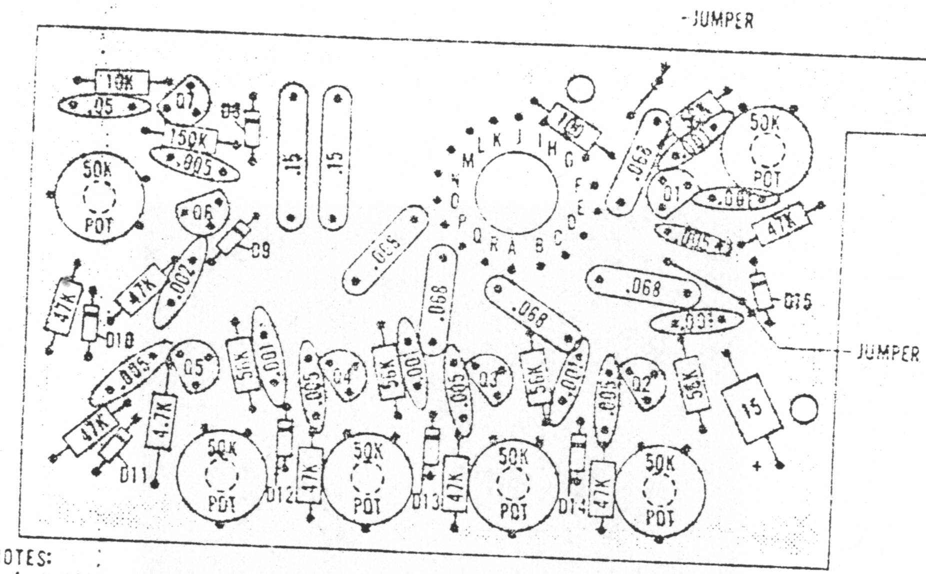

Ⓙ RED
TO POT

Ⓚ RED
TO POT

Ⓛ RED
TO POT

Ⓜ BLK. TO
SWITCH

Ⓝ S. BRN.
TO POT

Ⓞ GRN.
TO POT

Ⓟ S. GRN
TO POT

Ⓠ YEL.
TO POT

Ⓡ S. YEL.
TO POT

NOTES:

1. UNLESS OTHERWISE SPECIFIED:
   ALL CAPACITANCE VALUES ARE IN MICROFARADS.
   ALL RESISTANCE VALUES ARE IN OHMS.
2. TRANSISTORS Q1 THRU Q7 ARE X32B4079 (Q-025).
3. DIODES D8 THRU D15 ARE DA2208 (D-001).

SCALE	NONE
DATE	12•27•74
	BEC
TITLE	5 CHANNEL ENCODER — LRB
NO	B-680

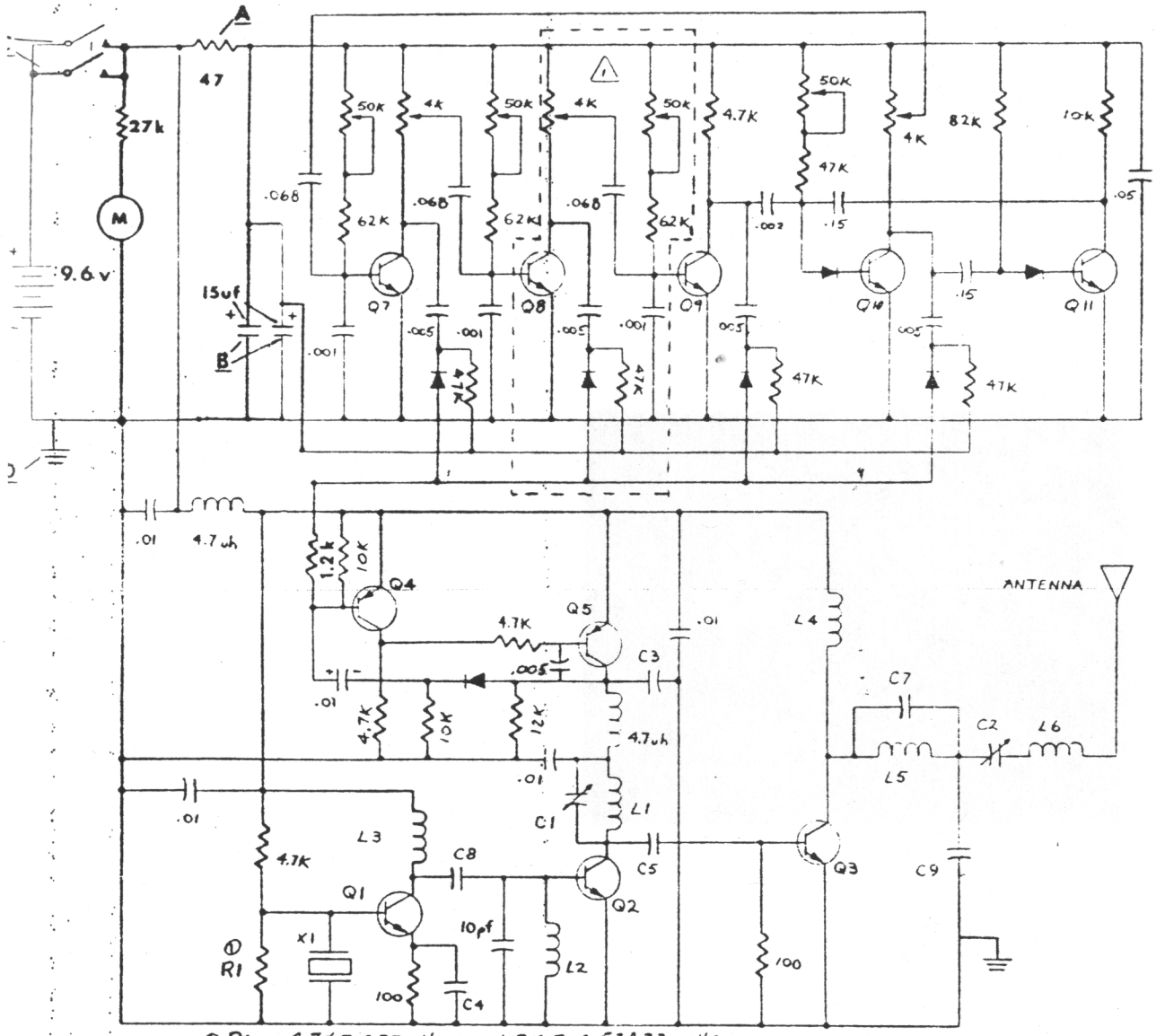

① R1 IS 4.7K FOR 27-MHz AND 1.2K FOR 53 & 72 mHz

	27 mhz	6 meter	72 mhz
C1	ARCO 404	ARCO 404	ARCO 403
C2	ARCO 402	ARCO 402	ARCO 402
C3	.01 uf	.047 uf	.047 uf
C4	68 pf	33 pf	33 pf
C5	33 pf	20 pf	20 pf
C6	OMITTED	OMITTED	OMITTED
C7	47 pf	10 pf	6.8 pf
C8	10 pf	10 pf	6.8 pf
C9	33 pf	20 pf	15 pf
L1	.68 uh	.22 uh	6 TURNS #20 ON 10
L2	100 Ω RES	4.7 uh	4.7 uh
L3	1.5 uh	.68 uh	.33 uh
L4	22 uh	4.7 uh	4.7 uh
L5	.15 uh	.22 uh	.22 uh
L6	4.7 uh	1.5 uh	.68 uh

Q1 & Q2 2N5030 OR DA32-FA
Q3 2N5128
Q4 & Q5 34A1165
ALL OTHER TRANSISTORS ARE 32B4079
ALL DIODES ARE GE 1N4154

Optional nicads with low voltage charger

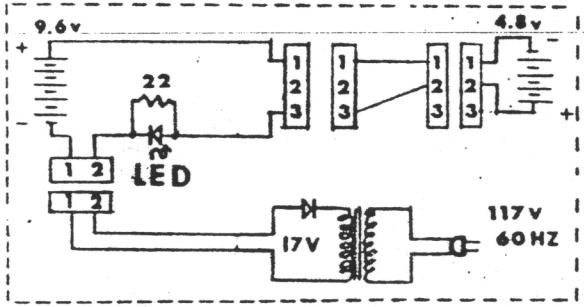

E.K. PRODUCTS INC.
3235 W. FORTIS ST., HOUSTON, TEXAS 77043

SCALE none	REVISIONS	BY	DATE
DATE 4-27-76			
DR'N SJ / CKD DDO			
APVD. EKE			

TITLE: Circuit Diagram for LRB and Champion Transmitter

NO. B-681

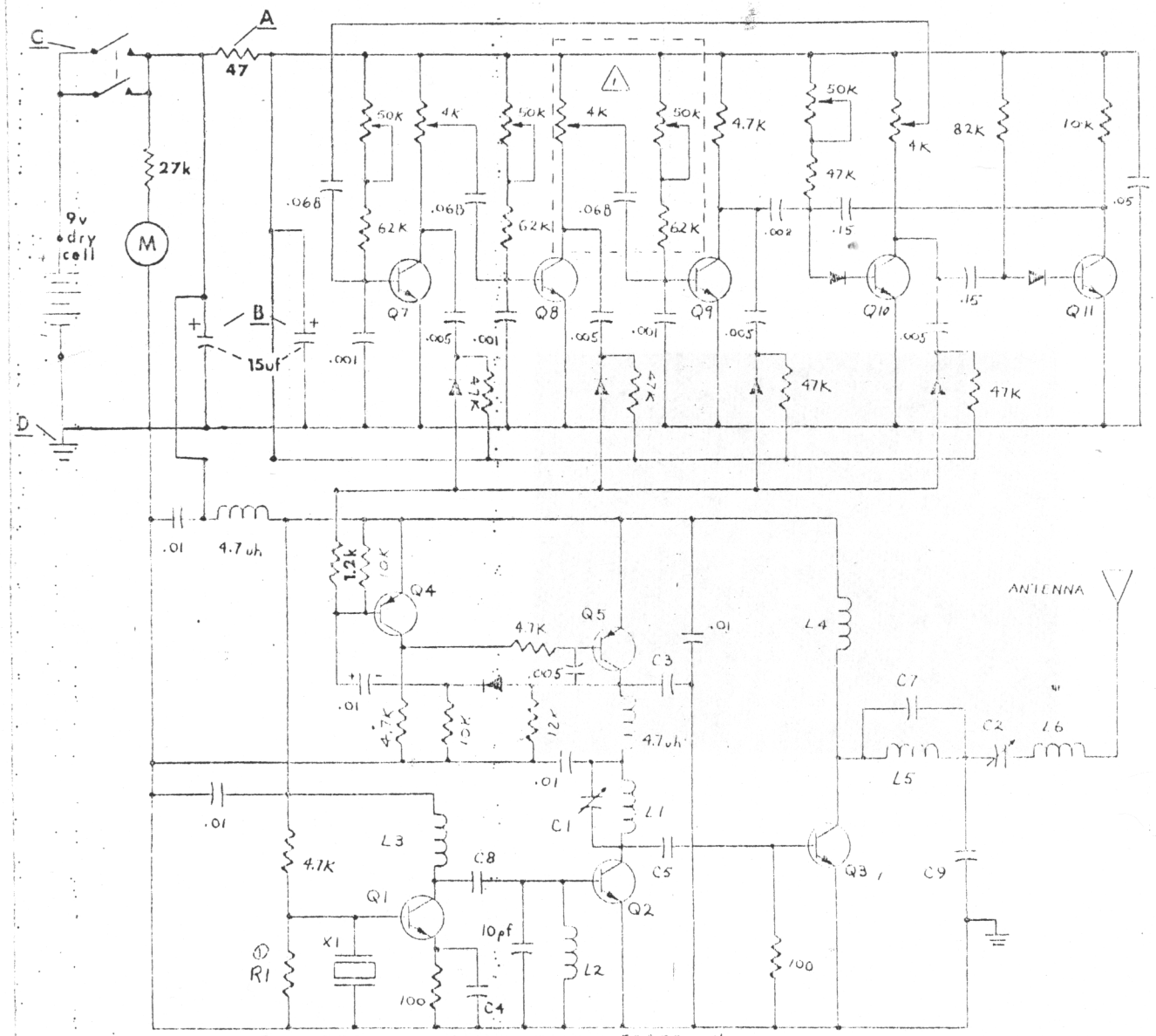

	27 mhz	6 meter	72 mhz
C1	ARCO 404	ARCO 404	ARCO 403
C2	ARCO 402	ARCO 402	ARCO 402
C3	.01 uf	.047 uf	.047 uf
C4	68 pf	33 pf	33 pf
C5	33 pf	20 pf	20 pf
C6	OMITTED	OMITTED	OMITTED
C7	47 pf	10 pf	6.8 pf
C8	10 pf	10 pf	6.8 pf
C9	33 pf	20 pf	15 pf
L1	.68 uh	.22 uh	6 TURNS #20 ⅜ ID
L2	100Ω RES	4.7 uh	4.7 uh
L3	1.5 uh	.68 uh	.33 uh
L4	22 uh	4.7 uh	4.7 uh
L5	.15 uh	.22 uh	.22 uh
L6	4.7 uh	1.5 uh	.68 uh

Q1 & Q2 — 2N5030 OR DA32-FA
Q3 — 2N5128
Q4 & Q5 — 34A1165
ALL OTHER TRANSISTORS ARE 32B4079
ALL DIODES ARE GE IN4154

Optional nicads with low voltage charger

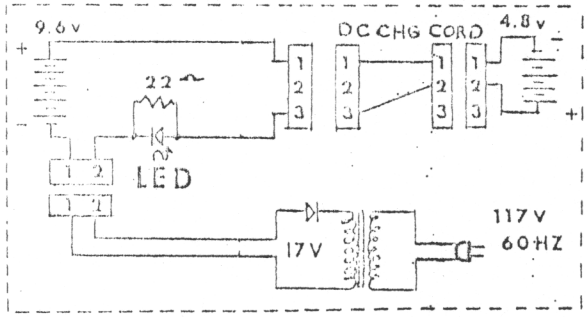

B.A. PRODUCTS INC.
323 [illegible] HURST, TEXAS 76[illegible]

SCALE none	REVISIONS	BY	DATE
DATE 11-27-76			
DR. 95 CK. DDD			
APVD. DXC			

TITLE: Circuit diagram for '76 Ranger

NO. B-682

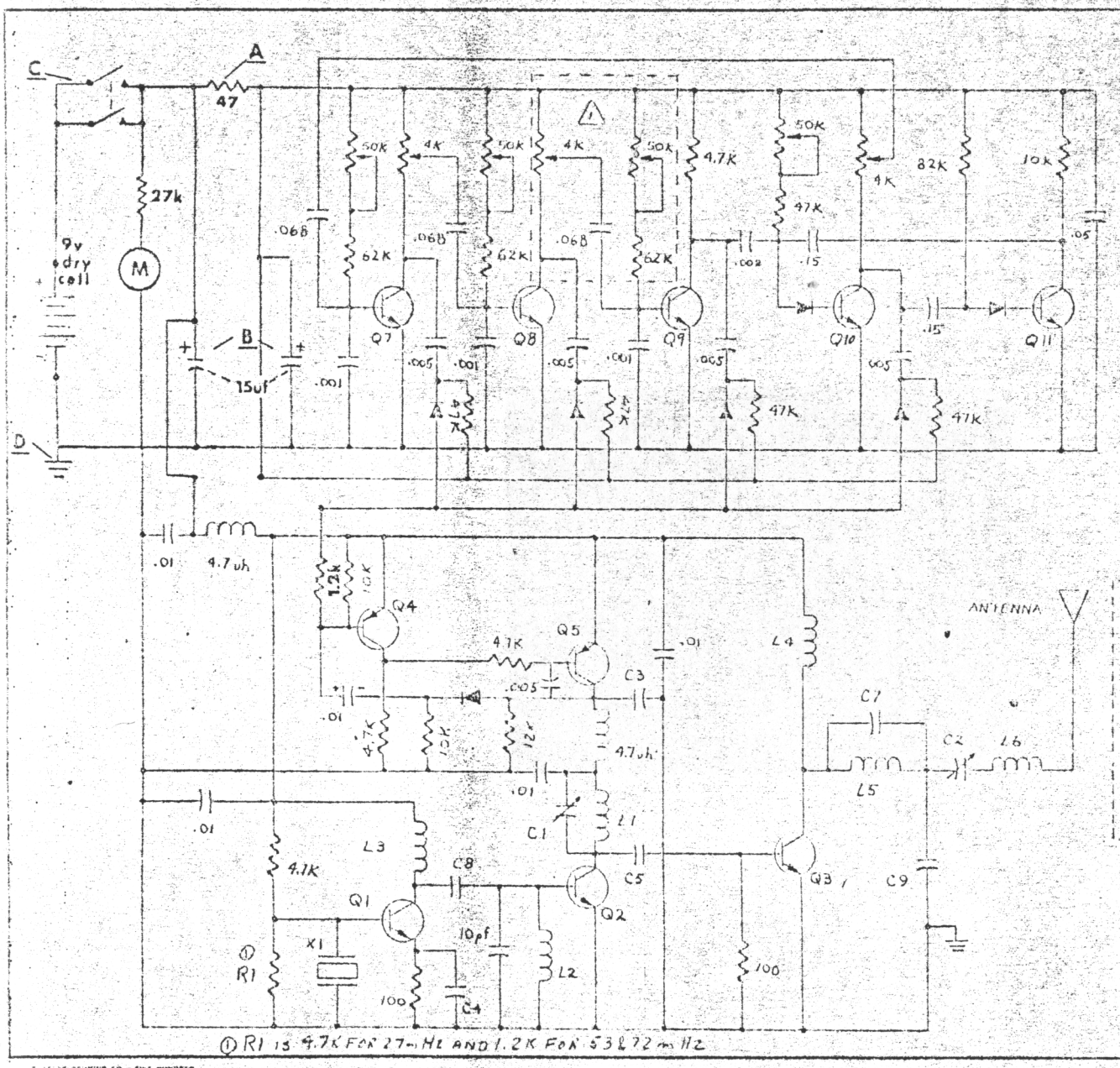

	27 mhz	6 meter	72 mhz
C1	ARCO 404	ARCO 404	ARCO 403
C2	ARCO 402	ARCO 402	ARCO 402
C3	.01 uf	.047 uf	.047 uf
C4	68 pf	33 pf	33 pf
C5	33 pf	20 pf	20 pf
C6	OMITTED	OMITTED	OMITTED
C7	47 pf	10 pf	6.8 pf
C8	10 pf	10 pf	6.8 pf
C9	33 pf	20 pf	15 pf
L1	.68 uh	.22 uh	6 TURNS #20 ON ID
L2	100 Ω RES	4.7 uh	4.7 uh
L3	1.5 uh	.68 uh	.33 uh
L4	22 uh	4.7 uh	4.7 uh
L5	.15 uh	.22 uh	.22 uh
L6	4.7 uh	1.5 uh	.68 uh

Q1 & Q2 — 2N5030 OR DA32-FA
Q3 — 2N5128
Q4 & Q5 — 34A1165
ALL OTHER TRANSISTORS ARE 32B4079
ALL DIODES ARE GE 1N4154

Optional nicads with low voltage charger

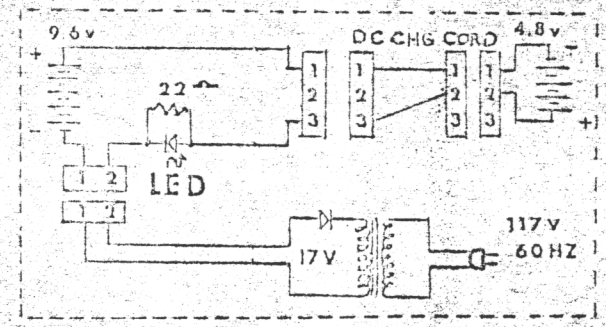

SCALE	none	REVISIONS	BY / DATE
DATE	4-27-76		
DR.	SJ DOD		
APPR.	PKC		
TITLE	Circuit diagram for '76 Ranger		NO. B-582

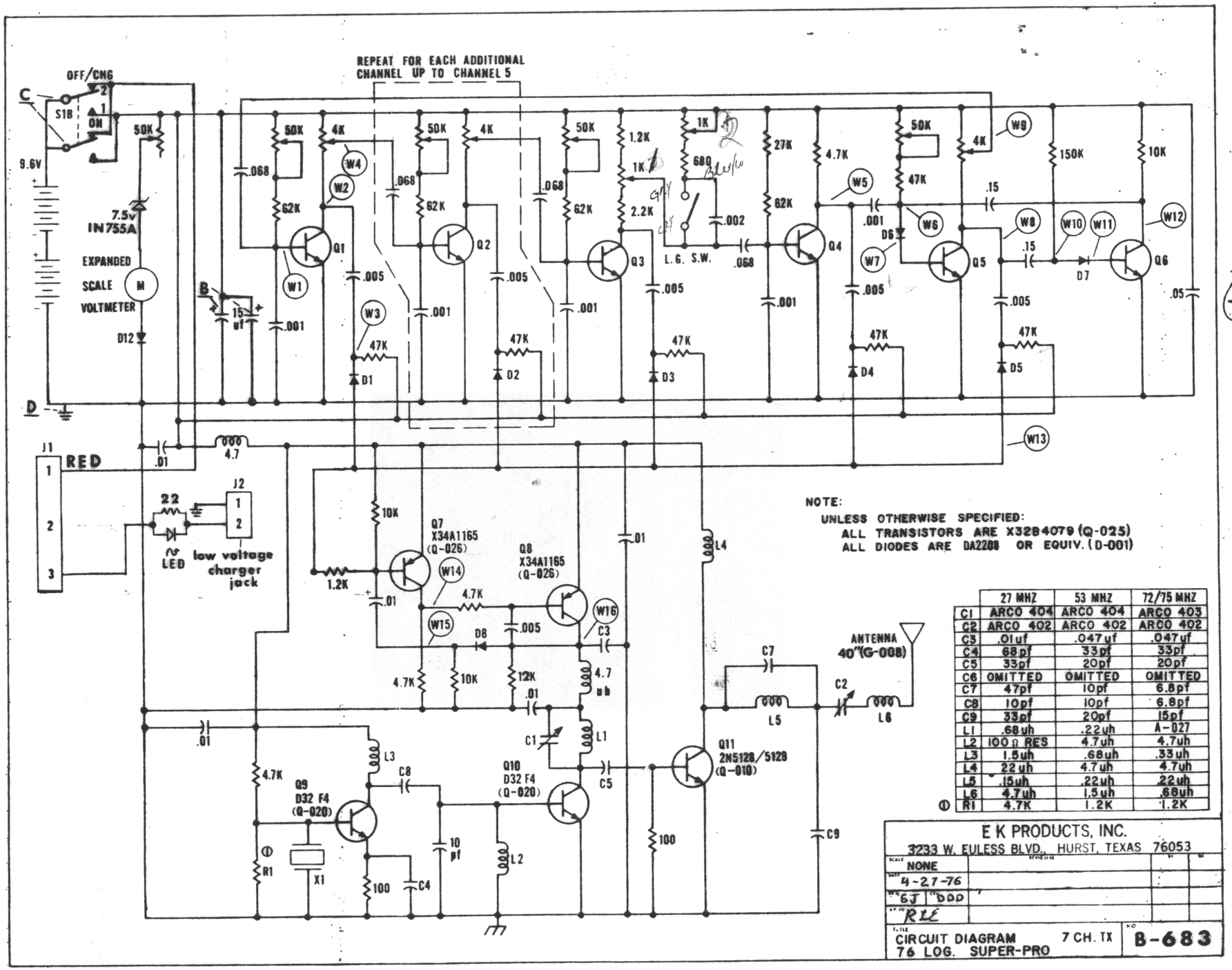

NOTE:
UNLESS OTHERWISE SPECIFIED:
ALL TRANSISTORS ARE X3284079 (Q-025)
ALL DIODES ARE DA2288 OR EQUIV. (D-001)

	27 MHZ	53 MHZ	72/75 MHZ
C1	ARCO 404	ARCO 404	ARCO 403
C2	ARCO 402	ARCO 402	ARCO 402
C3	.01uf	.047uf	.047uf
C4	68pf	33pf	33pf
C5	33pf	20pf	20pf
C6	OMITTED	OMITTED	OMITTED
C7	47pf	10pf	6.8pf
C8	10pf	10pf	6.8pf
C9	33pf	20pf	15pf
L1	.68uh	.22uh	A-027
L2	100Ω RES	4.7uh	4.7uh
L3	1.5uh	.68uh	.33uh
L4	22uh	4.7uh	4.7uh
L5	.15uh	.22uh	.22uh
L6	4.7uh	1.5uh	.68uh
① R1	4.7K	1.2K	1.2K

E K PRODUCTS, INC.
3233 W. EULESS BLVD. HURST, TEXAS 76053

SCALE NONE
DATE 4-27-76
DRN GJ CKD DDD
APPD RLE

TITLE CIRCUIT DIAGRAM 7 CH. TX
76 LOG. SUPER-PRO

NO B-683

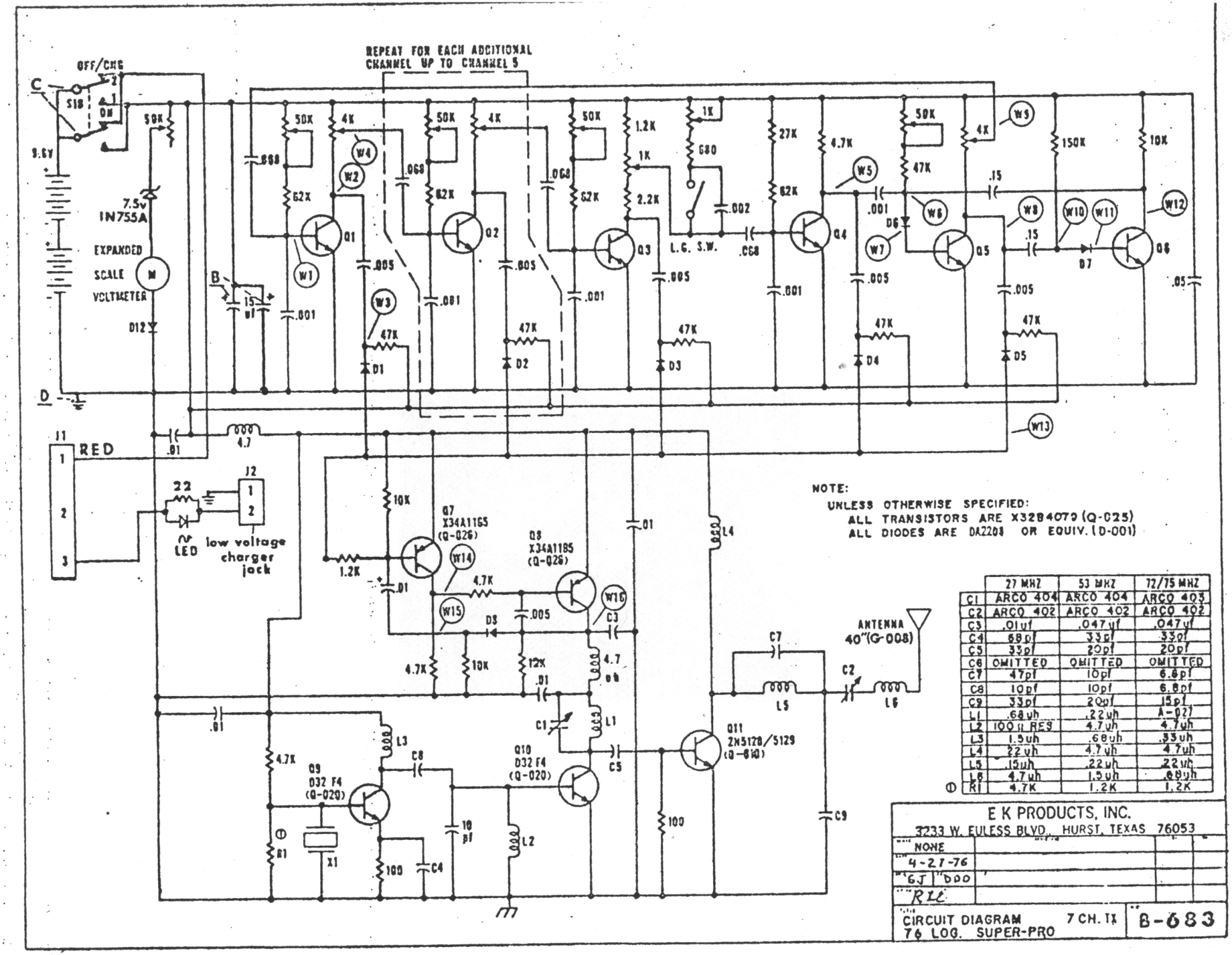

NOTE:
UNLESS OTHERWISE SPECIFIED:
ALL TRANSISTORS ARE X3284079 (Q-025)
ALL DIODES ARE DA2204 OR EQUIV. (D-001)

		27 MHZ	53 MHZ	72/75 MHZ
	C1	ARCO 404	ARCO 404	ARCO 403
	C2	ARCO 402	ARCO 402	ARCO 402
	C3	.01uf	.047uf	.047uf
	C4	68pf	33pf	33pf
	C5	33pf	20pf	20pf
	C6	OMITTED	OMITTED	OMITTED
	C7	47pf	10pf	6.8pf
	C8	10pf	10pf	6.8pf
	C9	33pf	20pf	15pf
	L1	.68uh	.22uh	A-027
	L2	100 µ RES	4.7uh	4.7uh
	L3	1.5uh	.68uh	.33uh
	L4	22uh	4.7uh	4.7uh
	L5	.15uh	.22uh	.22uh
	L6	4.7uh	1.5uh	.68uh
①	R1	4.7K	1.2K	1.2K

E K PRODUCTS, INC.
3233 W. EULESS BLVD., HURST, TEXAS 76053

NONE			
4-27-76			
GJ DDO			
RLL			

CIRCUIT DIAGRAM 7 CH. TX
76 LOG. SUPER-PRO

B-683