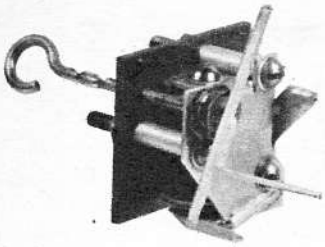

MacNabb's SN
Wt., .5 oz.

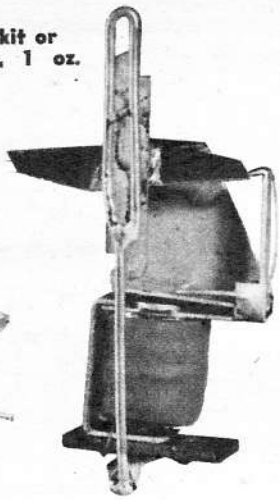

RCH—kit or
complete, 1 oz.

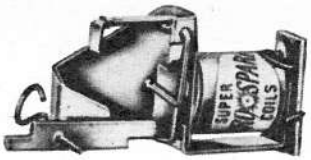

Aerotrol—kit
or complete, .5 oz.

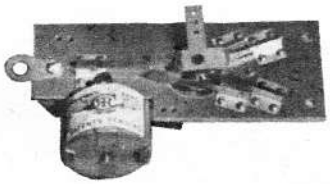

Rockwood self-neutralizing
"rudder" servo—motor driven

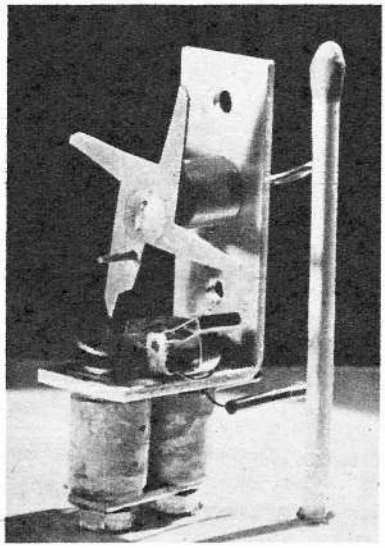

Good Brothers, 1 oz.

R/C PRIMER:

Moving the Control Surfaces—1

Been looking for some really basic, easily understood information on radio control escapements? AT's R/C columnist presents all the dope needed for a good start

By HOWARD G. McENTEE

■ We have learned that there is a wide variety of radio control equipment on the market today. There is an even wider variety of machinery used to move the control surfaces in your plane, however. Unlike the actual transmitter and receiver, much of the surface moving equipment must be built by the flyer himself, though some is to be had from the same makers who build the radio parts of the installation.

The electronic part of the equipment serves only to operate a set of electrical contacts (on the sensitive relay) in the plane. What can be done with them? The first idea that comes to mind is to move the rudder and so steer the ship—that is exactly what most flyers now do.

An ultra-simple system for this purpose is depicted in Fig. 1. Here a small motor is connected to the relay contacts and a battery. When a signal comes in, the motor turns the rudder back and forth slowly. Pretty crude, but it *is* radio control, and good flights have been made with such a setup. The motor may be stopped in any position to hold a turn, but the plane must be watched closely, in order to stop the rudder where desired.

An even simpler system which does away with the gears is that in Fig. 2, where an electromagnet with an extended arm is linked to the rudder. This gadget will allow turns only one way, depending upon the way the stops are set. As shown, you can have right turn and neutral; to go left, you must hold the plane in a right turn for 270 deg. more or less.

It isn't much of a step from this to another electromagnetic device that really gives fast control to either side. This is the escapement; to the magnet of Fig. 2 we add a pivoted armature and a "wheel" with two or more arms. Power to run the wheel and to move the rudder comes from a rubber band—electricity is used only to *control* this power.

Figure 3 shows a two-arm escapement, the simplest sort, though it has quite a few advantages (and some disadvantages, too) over other designs. As we show it, there are four possible positions, two neutrals and one each of right and left. To get the latter, you must hold the transmitter button down to send out a continuous signal. As soon as you release the button, the escapement jumps to neutral.

This is helpful to the inexperienced—if you are flying in a turn and want to straighten out fast, just let go of the button! Holding a turn for a long time means that the escapement batteries are on continuously; they will run down faster with a two arm escapement than with the style shown in Fig. 4.

Here we have the four-arm design, which requires power from the battery only to move the rudder to the position you want—but none to hold it there. This design also offers half-positions, though few flyers make use of them for this purpose. It will be seen from the diagrams that a pulse (that is, when you depress the button and release it immediately) is required to go from neutral to either left or right, and another pulse to get from the turn position back to neutral.

A few experimenters have used three-arm escapements, but these are very rare, and none is made commercially, though the one shown in Fig. 5 might be called a three-arm type since it has three "working" arms (and we don't consider the neutral position a "working" one). This is a new development that will doubtless prove very popular, for it is ideal for the novice and the expert alike. The beginner should like it because there is no necessity to remember "what position comes next," a feat that bothers even the advanced flyer at times. There is only one neutral, and whenever the button is released, the wheel moves to this position.

In operation, one pulse will always produce, say, left—two pulses, right. You can thus make any number of right turns without going through unwanted (and often confusing) lefts. To hold a turn, you just hold the button down. The commercial version of this escapement has a third position which may be used for any purpose you wish; in this position, an electrical contact is closed which may be used to work an elevator, or for motor control. This novel unit was perfected by H. H. Owbridge (*Continued on page* 70)

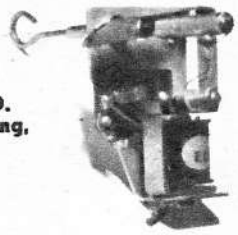

Polk's E. D. double winding, 3/4 oz.

Bonner motor escp. (lt.), compound escap. (rt.)

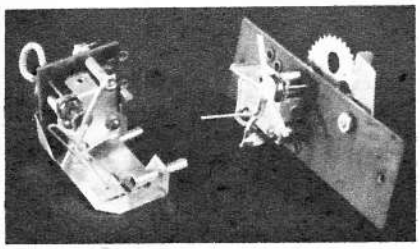

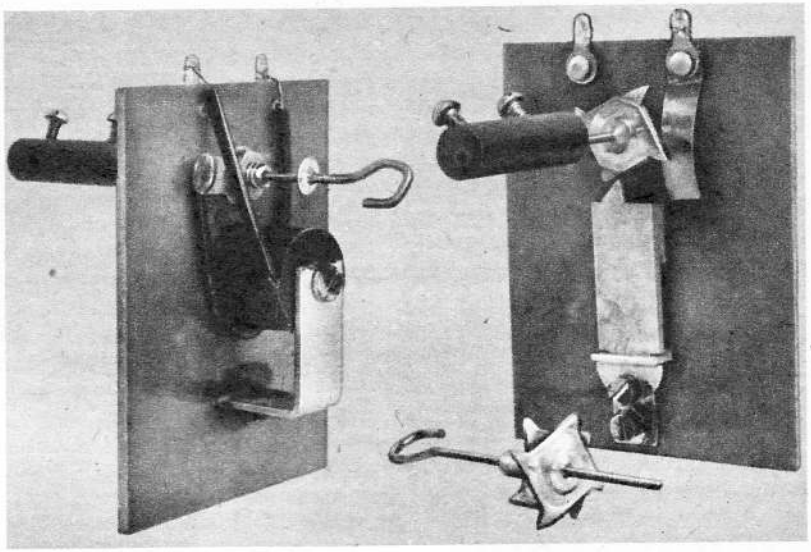

Telasco's E.C.C., 7/8 oz. double winding, uses 2 or 4 arms

DIAGRAM DATA: 1) Simplest type of rudder control. 2) Next step in moving the control surfaces (see article for additional details on all of these). 3) Aerotrol and RCH types. 4) Good Brothers (formerly Beacon). 5) Bonner Compound escapement action; Point B can only engage arm #1 for neutral-current off condition; arms 2, 3 and 4 can hit only Point A; contacts closed only in position D; note that neutral arm is almost at same spot as in A; not shown is a "governor" that slows the rotation of the wheel.

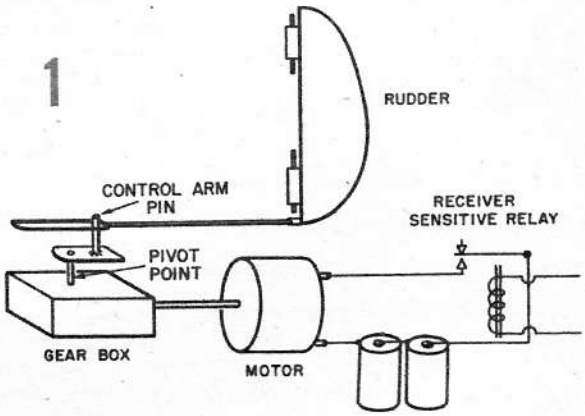

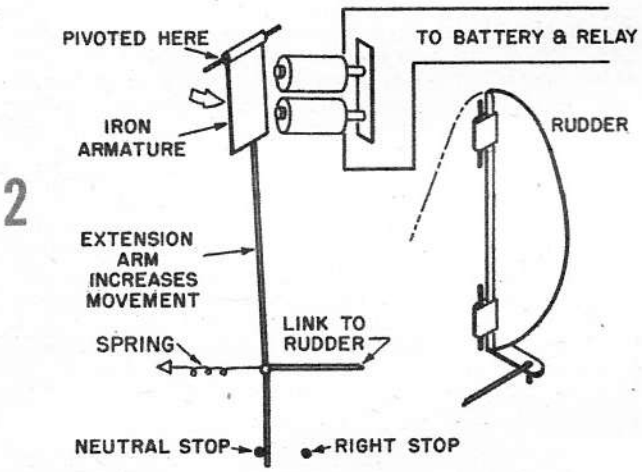

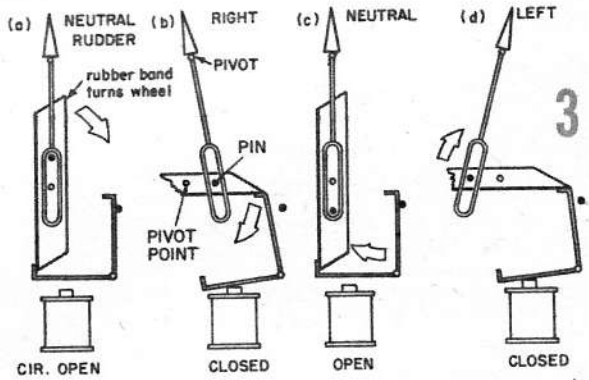

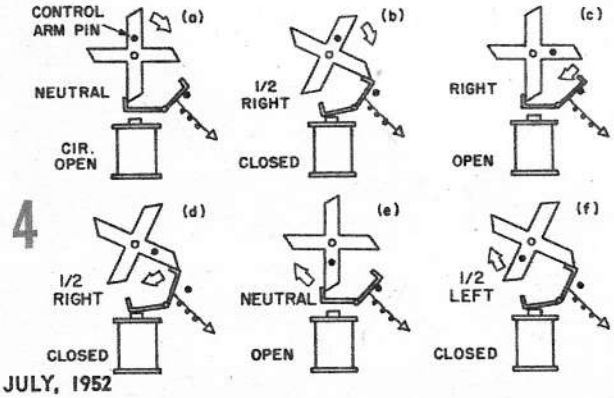

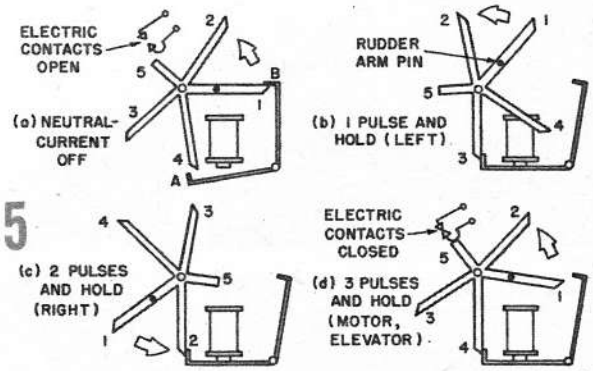

Control Surfaces

(*Continued from page 38*)

and Howard Bonner, and the latter manufactures it.

Though not widely used now, another interesting control mechanism was perfected by Owbridge, called the Rudevator. This consists of an escapement-like unit to which is connected a rotating vane—somewhat akin to one blade of a propeller—this blade being located back of the fixed rudder. The blade may be stopped in a number of positions, so as to give the effect of right or left rudder and up or down elevator, or combinations of rudder and elevator. In actual practice, though, it has been found that with the vane set to give the desired degree of turn, there just isn't enough elevator to be worth while. In other words, it takes proportionately much more elevator action to move a plane from a straight course than it does rudder.

Before leaving the subject of escapements, mention should be made of one that is designed expressly for the purpose of motor control. Another Bonner development, it has a normal escapement mechanism, but the moving arm operates valves to produce two-speed motor control or motor cut-off, as desired. When the armature is held in the operated position, the high speed needle valve is cut out, stopping the engine. To change from high to low speed, a short pulse causes the valve connected to the low speed needle to shift; another pulse resets it. Fast pulses do not have much effect upon the high speed needle valve. At low speed position, of course, both needle valves are feeding fuel, causing the engine to run with a rich mixture.

As noted previously, one of the principal objections to the two-arm escapement is the fact that in a continuous turn, a steady current is drawn from the battery. Means to reduce this greatly have been incorporated in some commercial units. Both the E.C.C. and E.D. types have what is termed a current-saving feature, which means simply that normal current is drawn for an instant, as you press the transmitter button. As soon as the escapement moves to the selected position, a pair of electrical contacts cuts in another winding, which then holds the mechanism firmly with only a fraction of the current that would be required without this feature.

All escapement-operated devices (except the Bonner unit we have described) have to move through a set sequence. You *must* go from—for example—

neutral to right to neutral to left, etc. If you want to make several left turns, you have to pulse through unwanted right position each time. This isn't really as hard as it sounds, and experienced flyers do it automatically. Even so, however, they occasionally are apt to give the wrong number of pulses, particularly in close or fast maneuvering.

A mechanical gadget, the Beep Box, can be built that will count the number of pulses for you—all you have to do is move a lever to right, left or neutral as required—and the Box will supply the necessary pulses to turn the rudder. Described thoroughly on Air Trails' full size plan #R101 (35c), this device may be applied to any type of escapement, and is ideal for the beginner, since it allows him to concentrate on flying, not on counting pulses. Oddly enough, the Beep Box is used principally by expert flyers, who find it enables them to fly with high precision.

Many modelers have probably heard the mysterious term "proportional control" without knowing what it means, or what advantages this sort of control affords. Very briefly, true proportional control can simulate closely the action of the "stick" in an airplane. The control stick in model plane work, of course, is on the ground at the transmitter. The ideal system is so arranged that as you move the stick a small distance to the right, the plane rudder moves likewise, then stops at that position until the stick is brought back to center, whereupon the rudder accurately neutralizes. Any movement between center and full left or right of the control stick is immediately duplicated by the airplane rudder, and there is no sequence action as required in escapement flying.

What this sort of control can mean in model flying may easily be imagined. It makes possible the operation of a model plane with almost the speed and precision of full-size airplane practice. We will investigate this further in a subsequent R/C Primer article.