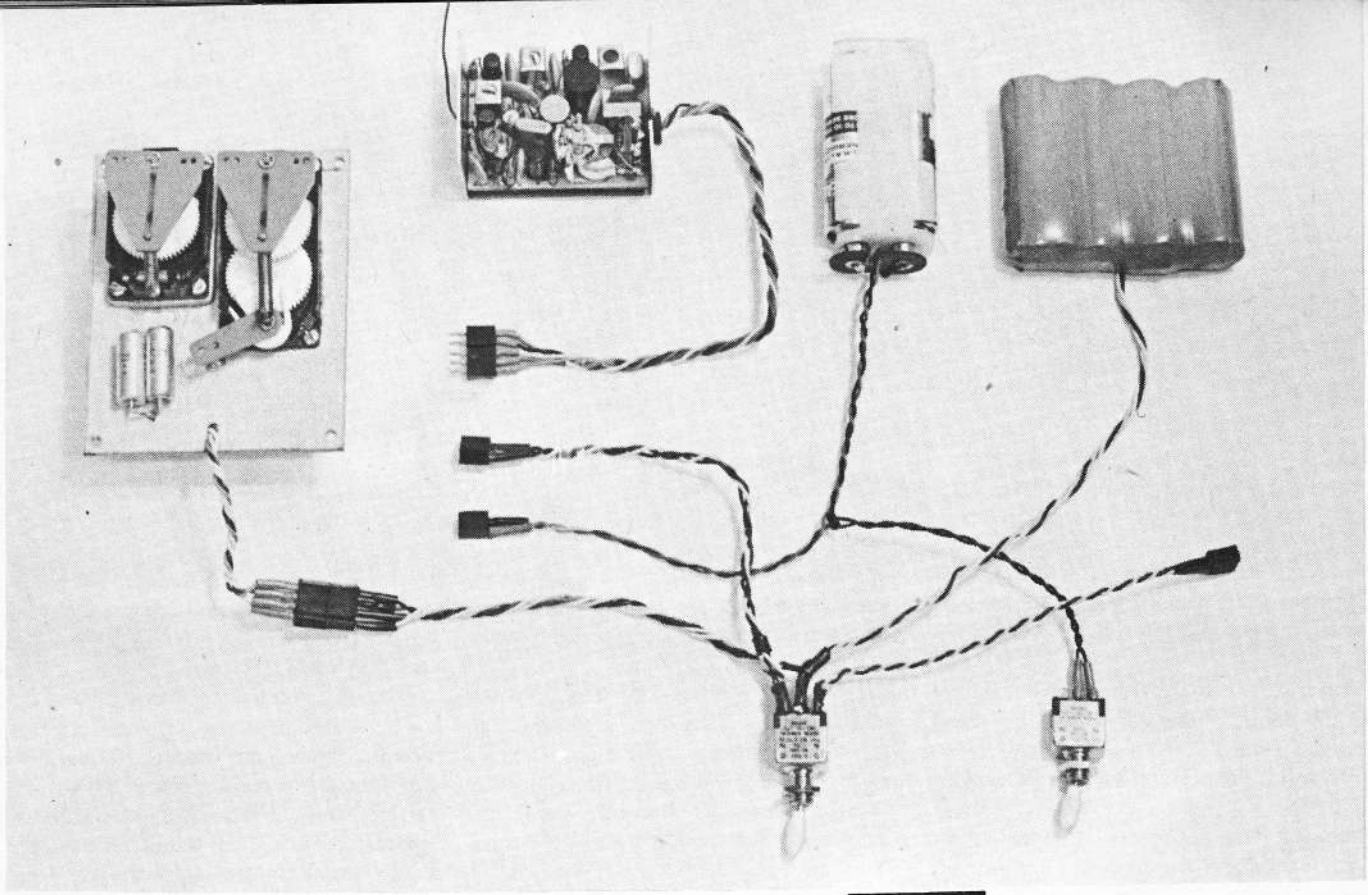

Simpro II

Dave Robelen's original 2.4-volt Simpro started much interest in obtaining full use of single-channel equipment. The Simpro II also provides two fully proportional control functions plus trimmable throttle using commercial actuators.

The high voltage Simpro system gives the Galloping Ghost flyer independent dual-proportional control using two independent servos. It is based on the use of commercial actuators and existing equipment, such as an older receiver-transmitter set to which has been added a modern pulser and a fast relay, or a modern Galloping Ghost transmitter-receiver combo whose pulser's rate has been appropriately increased. Simpro II system is an outgrowth of the original Simpro—which was intended to operate homemade Micro-Mo powered actuators in .01 to .02 planes.

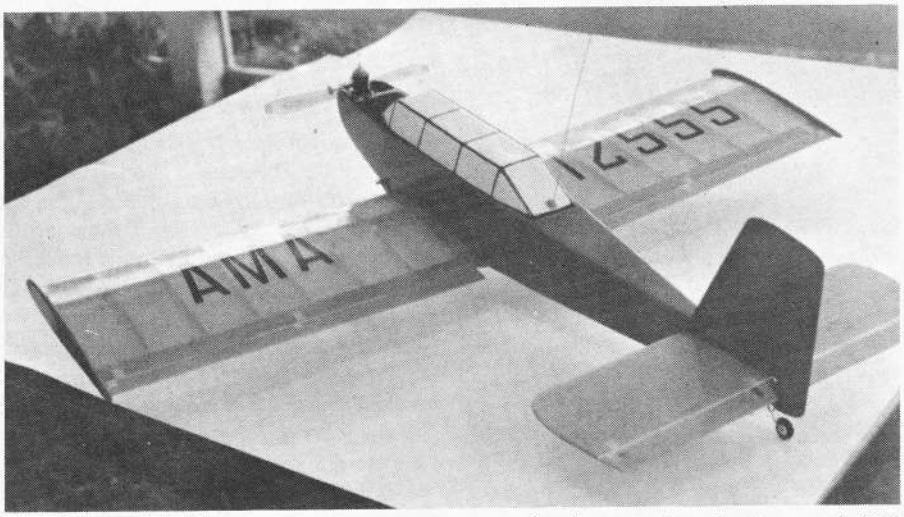

The Prophet was intended originally for Simpro using homemade actuators, and .020 engines. It can be enlarged for almost full-house with Simpro II on .049. The system can also be made to operate feedback servos for even larger planes.

The Simpro concept uses a coil and a capacitor to give an accurate and powerful proportional control of a secondary function when added to an existing pulse rudder servo. There are many transistorized networks which also will decode pulse rate but they are expensive and far too complicated for the "average" RC enthusiast. Therefore, with the Simpro concept, we are presenting a control system that can be understood and maintained by the modeler. *There is no electronic knowledge needed to operate, build, or maintain the* (*Continued on page* 74)

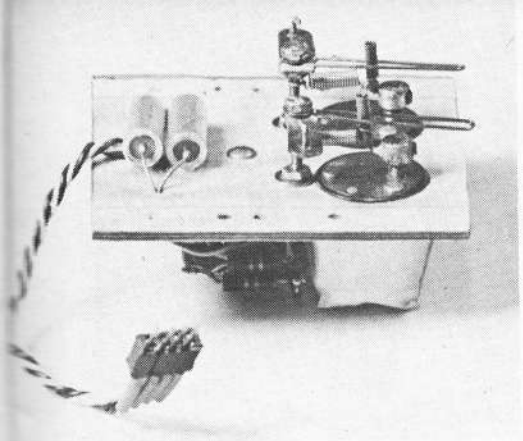

This is a homemade servo set using the Micro-Mo motors following the design of the original Simpro servos. Uses TO-3's.

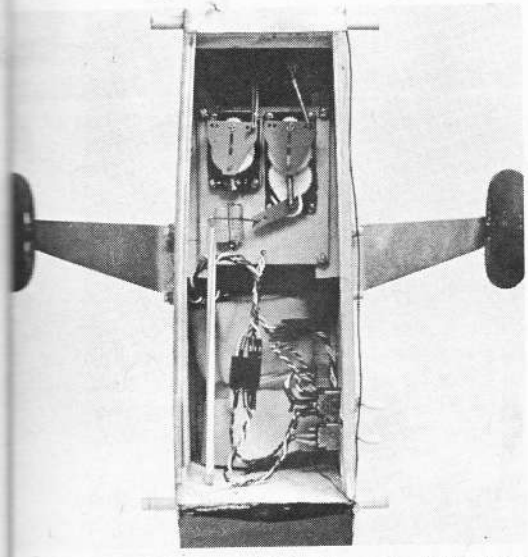

The full Simpro II treatment installed in a .19 powered Mambo Special. Much more performance than just Galloping Ghost.

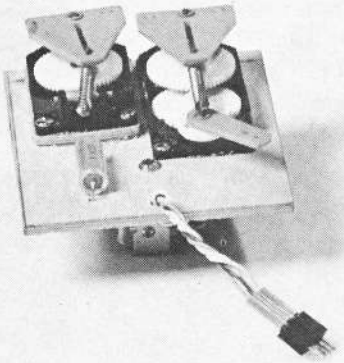

Any pulse servo will work well in Simpro II. The Rands shown are the HR-1 and HR-2. Throttle by go-around function. Below: Another view of the same set-up.

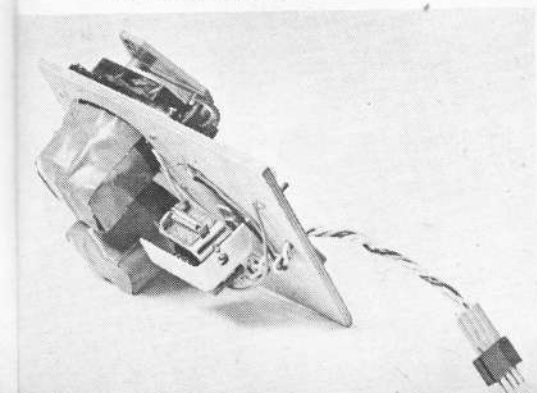

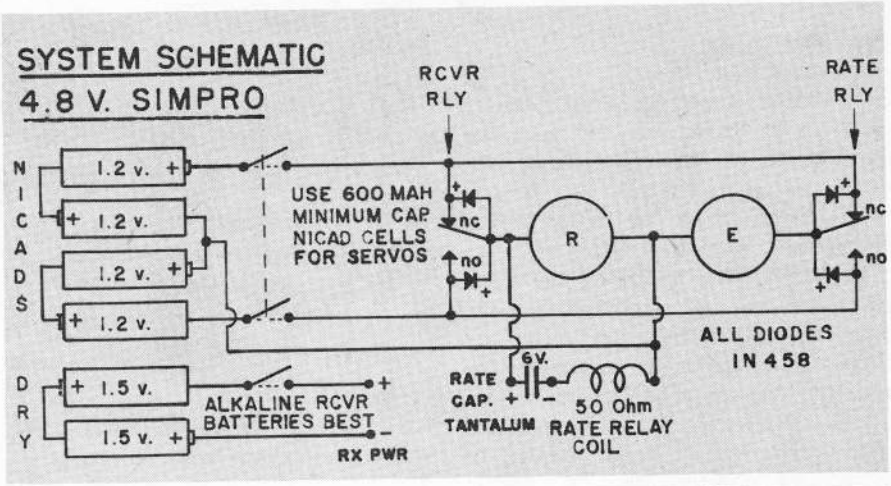

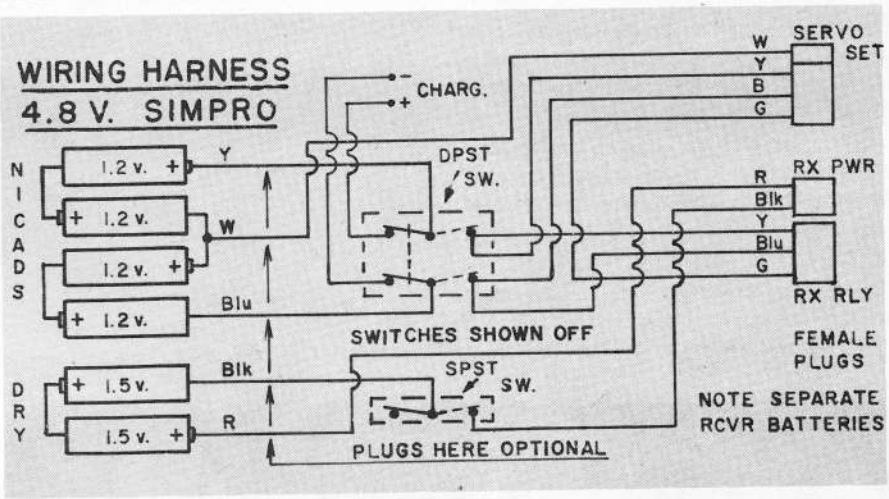

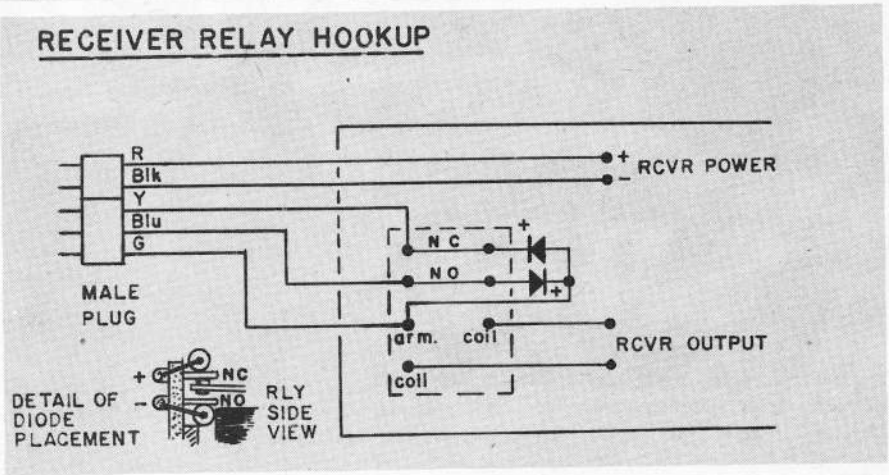

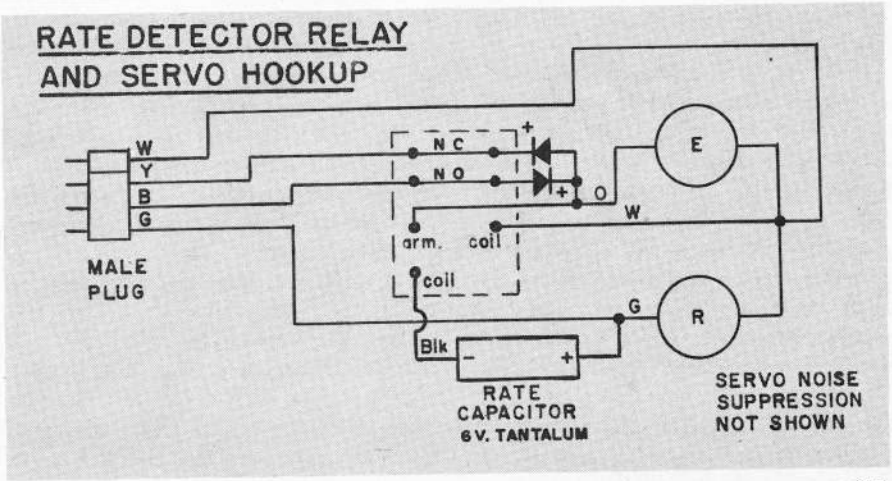

Simpro II

(*Continued from page* 36)

system.

Electronically speaking, the faster you pulse the current into the rate capacitor, the more current it will pass in a given period of time. More current passing through the relay's coil will pull in its armature. When the armature is pulled in, the elevator servo moves to down elevator position. The relay is wired to operate the elevator servo using the same four 1.2V nickel-cads of 600 ma capacity that are wired to operate the rudder. (*Note:* If you are presently using a switcher and three batteries for 3.6V, the Simpro can be applied; but it is far more complicated and it is less expensive for you to eliminate the switcher, add one more battery, and rewire for four batteries centertapped for ± 2.4V.) The rate capacitor is added to the circuit at the brushes of the rudder servo and in series with the coil of the 50-ohm relay. (See diagram.) Thus, we are easily *adding* to the existing rudder-only circuit.

One of the limitations of a system that pulses a single tone for width-rudder and rate-elevator is the fact that a decoder of the tone (a tone filter that triggers a relay) must receive a certain length of the tone before deciding to respond to it. This often takes about seven to ten cycles of the tone at whatever tone frequency is being detected. When using a relatively high pulse rate, as in the Simpro, we can easily adjust the speed of the pulsing and the pulse width extremes so that there is *not* a long enough pulse for the receiver to follow. This results in apparent interaction between the functions.

Since each receiver is different, we will always use the rate at which the interaction begins to appear as the down-elevator position—our highest pulse rate. Our pulse width shift is limited to 75-25 percent at either rudder extreme. Thus, we have

avoided any of the receiver limitations.

SIMPRO II SYSTEM ADJUSTMENTS: There are two basic methods of adjusting the Simpro systems. Dave Robelen presented the visual-mechanical servo-watching method in the original Simpro. Here we will describe a method using an ohm meter. Most modelers have one of the inexpensive "made in Japan" units costing less than $15. It is recommended that you have one because it is useful in all RC work, even if you are not a scratch builder.

Using the lowest ohm scale on the meter, zero the meter with the leads touching. Leads open is no-circuit, leads touching firmly is full-circuit.

Since too wide or too short a pulse at the rates of Simpro's elevator control can cause interaction, we must limit the movement of the control stick in both elevator and rudder positions. After finding these limits of your control sticks in your equipment, you can replace the existing control pots with the pot values that give the correct pulse width and rates at the full-stock movements. This may seem like a lot of work, but the system will never need further adjustment once this is accomplished. Set the pulse rate at about the position of down elevator as in Galloping Ghost. This is roughly neutral in Simpro.

The leads of the meter are temporarily attached to the armature contact, and the

(*Continued on page* 76)

(*Continued from page 75*)
normally open contact of the receiver (rudder) relay. With the system turned off, the meter should read open circuit and with the relay closed (use your finger to depress its armature) the meter should read closed circuit. Neutral will be that position of the meter's indicator half-way between the open and closed circuit positions and the indicator will be pulsing evenly about that position.

When only the receiver and transmitter are turned on and the receiver relay is pulsing, you will notice that the meter indicates somewhere between either end of the scale and the needle is wiggling. (Note: this is done without the Simpro harness plugged in.) Looking only at the meter's scale for volts, adjust the pulse width at the transmitter so that the needle points to the center of the scale—on a ten-volt scale this will be five volts indicated. When the control stick is moved to either extreme the needle should follow the movement evenly and show the same amount of movement at both full left and full right stick. (If the meter is not able to center, transpose the meter leads—this happens because the diodes blocked the current used in indicating ohms.) Limit the control stick movement if necessary so that the needle shows more than three and less than seven on the ten-volt scale. With this limitation you have set up the pulser for 25%-75% pulse width. The pulse width should also be checked at the normally closed contact of the receiver relay and be sure that the diode is not blocking this time either. You should have the same indications; if not check the condition of the relay contacts and the spring tension.

With the Simpro system wired completely but less servos, attach the meter leads to the wires for the elevator servo. Use the meter on a three-volt scale. With the set operating, adjust the neutral of the elevator function for the exact rate at which the meter will read zero volts. Change the meter leads to the other relay contact, and check again for zero volts indication.

Again attach the meter as explained above for the receiver relay without the Simpro connected. Recheck the pulse width neutral. This will be a test of the width performance at the exact and correct neutral pulse rate for your particular Simpro II. Adjust if necessary. You should now have both width and rate properly balanced and operating smoothly. Without causing a width change at the control stick, move the stick toward down elevator until the pulse rate becomes so fast that the receiver will lag behind the pulses and show interaction—this will look like wandering rudder position on the meter.

Mechanically limit the down-elevator position of the control stick at that point where the interaction clearly begins. Also check that the up-elevator does not cause some kind of interaction too. It definitely should not.

Operate the complete Simpro II system with the servos. Both servos should now be in neutral position and your control stick limitations will allow any simultaneous positions of the two servos according to the stick position.

If any difficulty is found with the performance of the system when the servos are plugged in, the servos probably need noise suppression. When using the Belamatic servos or homemade Micro-Mo servos, a 6- to 10-ohm resistor should be placed in series with either of the servo motor leads. Aluminum or tin foil can be wrapped around the Micro-Mo motors (insulate the terminals first with tape) in order to contain the arcing or motor brush noise. The Rand servos are properly equipped with noise suppression components, but the Controlaire Ghost actuator needs the full set of World Engines noise suppression kit added to it. Good noise suppression does not interfere with the performance of an actuator. The World Engines suppression kit is well designed to thoroughly eliminate the noise.

If there is any tendency for the servos to "go-around" at the extreme stick positions, either further limit the control stick movement, or increase the spring tension of the servo. If the movement is not sufficient, decrease the spring tension *carefully*.

The Rand HR-2 is used for rudder and trimmable motor—the HR-1 is used for elevator servo. On the HR-1 replace the slotter output disc with the same type disc as on the HR-2. This allows the servo to "go-around" during throttle changes.

If you have the Controlaire Ghost transmitter, the stick pots are adjusted by loosening the bolts that project out from the pot shafts. Adjustments are made by holding the pot shaft while moving the stick. Then retighten. This repositions the pot shaft at the neutral position of the stick. With practice this is easy to do. On the Min-X galloping ghost transmitter the resister (in series with one of the outer contacts of the elevator pot) will require changing for getting the proper neutral rate. Install a pot of 20% higher value than the resistor in its place. Mount it on a bracket within the transmitter.

INSTALLATION: The servo set can be mounted with bolts or wood screws through rubber grommets to rails on the sides of the fuselage. It will help isolate the rate relay from the motor's vibration by mounting lightly in foam rubber within the fuselage.

The control surfaces must be hinged with cloth hinges, figure eight stitching, or aluminum tubing with wire hinge pins. Do not use any kind of hinge that supports the control surfaces such as nylon sheet hinges. The surfaces must be able to flop of their own weight. As with any other pulse system, absolutely free pushrods made of balsa and light music wire are a must. The entire pushrod should be supported only at its points of attachment—servo and control horn.

WIRING THE SIMPRO II: The entire wiring system explained here does not use the World Engines Simpro kit. It is presented for those who want to build the Simpro without adding the Simpro components in a common case with the receiver. Either system works equally well. The changes in the Simpro kit are noted here for building the Simpro II.

RELAYS: The 1N458 diodes used at both relay contacts for arc suppression should be mounted before mounting the relays. One diode is located above the normally closed contact (upper) with its positive end soldered to the contact. Another diode is located below the normally closed contact (lower) and its negative

end is soldered to the contact. Then both of the remaining leads of the diodes are soldered together with the relay's armature terminal. Do this for both relays. The diode is used for arc suppression in this version of Simpro because the system uses higher voltage and current. If building Simpro II with the kit, order the diodes from World Engines and omit four of the .01 capacitors. Using diode arc suppression on the relay contacts, there has never been any sign of pitting of the contact points and the relays will last indefinitely. Be sure that you never apply voltage backward through the relay since the diodes will short out the current.

Make all five plugs used in this wiring system at one time. Two sets of Deans, Orbit, or Kraft plugs will be needed. (Note: there are three female plugs.) The receiver power plug is separated from the receiver relay plug for convenience, since each has a separate power harness. They could be wired to a common five-pin plug and the wires twisted into one larger cable.

In the following description of the wiring sequence, note that all leads soldered to plugs are to be stripped ⅛" tinned with solder, and have a ½" insulating tubing ready to slide over the pin after the joint is soldered. The tubing is always slipped on the wire before the soldering.

Bring all five wires from the receiver together (three from the relay and two from the receiver, plus and minus) and clip them off evenly at whatever length is convenient. Six inches is fine. Be sure to check that all five wires are in good condition. Solder these wires to the five pin male receiver plug in the order shown.

RECEIVER POWER HARNESS: Starting with the receiver power switch SPST, solder an 8" black lead to the center terminal of the switch and a 6" lead to the corresponding end terminal of the switch. Solder the other end of the 8" black lead to the negative terminal of the receiver batteries. Solder a 14" red lead to the positive terminal of the receiver batteries and bring this past the switch. Twist the two leads from the switch to the batteries into a neat cable. Now clip the loose red and black leads from the switch evenly at about 6" from the switch. Solder these to a two-pin plug using, in this case, red tubing on the red wire and a black tubing on the black wire. This will aid in plugging in this set of power leads correctly. Twist the wires from the plug to the switch into a neat cable.

The diagram shows the use of two alkaline dry batteries for the receiver power. If you want, use three 250 ma nickel-cads instead, or whatever other power your receiver requires. With the receiver harness complete, operate the receiver with your transmitter and perform any necessary tuning now. Do not tune the receiver with servos plugged in.

SIMPRO II WIRING HARNESS: Begin with the DPST switch. From one of the end terminals solder two yellow leads each 6" long. From the other terminal on the same end of the switch solder two blue leads each 6" long. Now solder an 8" yellow lead to the center terminal of the switch on the same side as the other yellow leads. Then solder an 8" blue lead to the center terminal of the switch on the same side as the other blue lead. These, with a white lead, will be soldered later to the servo batteries. Insulate each of these connections at the switch with tubing.

With the two yellow and the two blue leads, solder the proper colors to the correct terminals of the receiver relay plug and to the proper terminals of the servo set plug. (Note that the order of the wires on these plugs are the same—this is just for convenience.) Solder each end of a 12" green lead to the proper terminals of the servo set plug and the receiver plug. You now will have three leads soldered to each of these two plugs. They should be the same length. Twist the receiver relay plug to make a neat cable to the switch. Now solder a long white lead to the end terminal of the servo plug. Using your harness as a guide to the length, stretch the servo plug out from the switch, and to the ends of the 8" blue and 8" yellow leads. This will be approximately 14" long. Clip the white lead to the length of the end of the blue and yellow leads as stretched out. These now are soldered to the servo batteries, according to the harness diagram.

The servo batteries are four 600 ma nickel-cads (higher if possible). Solder the jumper leads to the batteries as shown. To the plus end, solder the yellow wire, and to the negative end solder the blue wire. The white lead is soldered to the

(*Continued on page* 78)

(*Continued from page* 77)
center of the battery pack at one end of the middle jumper. Twist the three leads from the switch batteries to the switch into a neat cable and twist the four leads from the switch to the servo plug into another neat cable. Using the Scotch Mistic Tape, wrap the battery pack tightly and carefully to protect it from fuel and hard knocks.

Check all your work on the harness. With your volt meter, check that, at both plugs (receiver relay and servo set), you have plus 4.8 volts at yellow and minus 4.8 volts at blue.

The charging leads for the servo batteries can be wired as shown on the diagram or wired to the batteries directly. Charging through the switch allows the receiver and Simpro to be isolated from the charger.

MAKING THE SIMPRO II SERVO SET: Although it is not necessary that the layout of the servos and the relay exactly follow the method shown in the pictures and described here, the wiring is the same. A set has been built and flown with the rate relay mounted inside the cap of a spray can. It had two leads and plugs going out to the individual rudder and elevator servos respectively. In use, the cap was simply wrapped in sponge and mounted loosely in the plane. The rudder servo was used on ailerons as in the Prophet design by Simpro's inventor, Dave Robelen. The throttle function also was used with simply a wire connected to the Rand LR-2 throttle arm.

Mount two servos (Rand LR-1 and LR-2, or two Controlaire Ghosts, or two Mighty Midgets, or two TO-3 servos built as in the Simpro I, or two Belamatics, or two Airtrol's etc.) on a board of ⅜" plywood shaped according to the size and width of the plane. Put the servos in firmly and apply the full arc suppression kit from either ACE or World Engines to each servo. This board must be removable from the plane as the relay is mounted on it, top or bottom, whichever is convenient.

The relay is mounted on a right-angle piece of sheet brass which is heavy enough to support the relay firmly but allows some flexibility for vibration isolation. The arma-

ture of the relay must be positioned so that it is not sensitive to the vibration of the motor in your plane. Screw the brass bracket with the relay mounted on it to the plywood with a nut and bolt. Your layout should look like the picture of the bottom of the servo set. You already should have mounted and soldered on the arc suppression diodes as explained earlier.

Following the rate detector relay and servo hook-up diagram, join one of each of the motor leads and a 6″ white lead to one end of the relay coil. (Use a common ⅜ in. diameter hole for all the leads of the servo set to exit from the plywood to the plug for the servo set.) Bring the white lead out the hole. Solder a 6″ yellow lead to the normally closed terminal of the relay and solder a 6″ blue lead to the normally open terminal of the relay. Pass both of these leads out the hole. Mount the rate capacitor to the plywood board by drilling two small holes for the leads of the capacitor and lightly glue the capacitor to the plywood with contact cement. Solder two green leads to the plus terminal of the capacitor one 6″ long and the other long enough to reach the rudder servo's other terminal. Pass the 6″ lead through the hole and solder the short lead to the rudder servo terminal. Solder a black lead from the negative side of the capacitor to the relay coil terminal. Now solder an orange lead from the armature terminal of the relay to the elevator servo terminal. You should now have four leads coming out of the common hole of the plywood. Solder these wires to the five pin plug in the order shown in the diagram.

The key to the smoothness and beauty of the Simpro systems is the rate capacitor. Its best value will depend on your receiver, batteries, servo drain, and applied voltages. The Simpro kit supplies two miniature 47-mf 6V tantalum capacitors to be used in either Simpro I or II with the SH-100 superhet. They are used in parallel for 94-mf which is probably fine with all modern receivers. However, add whatever additional capacitance you need to tailor the system to your components. If possible, reduce the capacitance for less servo dither only if your system will allow it. The manufacturer of your receiver can recommend a slight change in its circuitry to operate at higher rates when needed.

After many flights on a single day, the elevator may become more "uppish." When increasing the rate of pulse of your transmitter, you can mount a pot of the appropriate value in series with the control pot and mount it on the face of the transmitter. It can be used as a convenient trim to compensate for battery voltage drop after many flights.

Simpro II has been flown in many different sizes and types of planes. It can fly a Taurus if the control surfaces are properly balanced dynamically and statically—even with a .45 engine. So much performance is available with Simpro using single channel equipment it offers the most enjoyment for the cost. Ed Sweeney

Moving? Six weeks notice is required to insure you don't miss an issue of the new AMERICAN MODELER.

PARTS LIST

2—47 mf-6V tantalum capacitors

1—50 ohm miniature relay—O.S., JEM, etc.

2—servos—any pulse servo will do fine.

2—packs Deans, Orbit, or Kraft plugs.

4—1N458 diodes for arc suppression—(most other Silicon diodes will do fine too).

1—relay single channel receiver, SH-100, Min-X, Kraft, ACE, Orbit, etc.

1—transmitter with a good smooth pulser having a maximum of 25 pps ability. Controlaire, Min-X, Airtrol, Janssen, etc.

Straight and Level

(*Continued from page* 4)

speak, and sufficiently high strength-weight ratios are achieved with comparatively small cross sections of structural members. In radio, there's a trend to styrofoam and other substitute materials; a number of companies turn out ready-to-fly machines which use no balsa at all. Numerically, the greatest production of ready-to-fly craft is in control-line (Cox for example) where plastics have been kingpin for many, many years. Anyway, it is nice to know that build-your-own craftsmanship and balsa kits continue to rate highly in the hobbyist's esteem.

(*Continued on page* 80)