C&S ELECTRONICS
7377 BEVERLY BOULEVARD, LOS ANGELES 36, CALIFORNIA

Operating Instructions

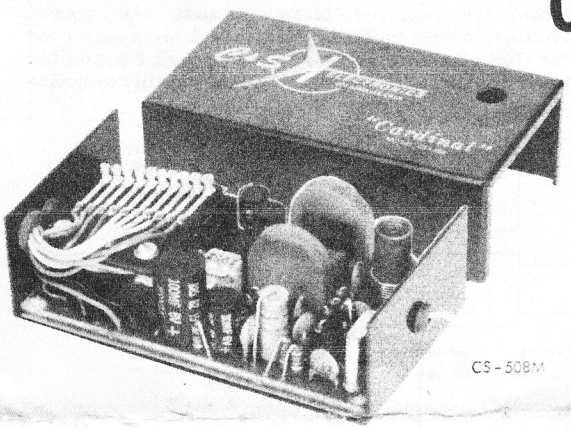

CS-508M

for the "Oriole" and "Cardinal"

SUPERHET RELAYLESS RECEIVER (MODELS CS-507/CS-508)

DESCRIPTION

Your CS-507/CS-508 Superheterodyne Receiver is one of the most selective and sensitive R/C units available today. Bandwidth is narrow enough to reject undesired signals 5 Kc or more away from the receiver frequency, while sensitivity is high enough to permit receiver operation on signals as low as two microvolts. In addition, highly efficient reverse AGC (Automatic Gain Control) to prevent overloading at close operating ranges, extremely small size, light weight, ruggedness, low operating current drain, and above all extreme reliability, contribute to a receiver which should provide years of pleasurable service.

Basic difference between the CS-507 and CS-508 Receivers is physical size, and type of reed bank used in the multichannel version. Both CS-507 and CS-508 units are also available as single-channel relay receivers, convertible to multichannel at moderate cost. The following chart and specifications cover differences in the four receiver models.

PHYSICAL CHARACTERISTICS

Model	Comments	Dimensions (inches) Height	Width	Length	Weight (ozs)
CS-507S	Single-channel relay, full arc suppression on points (Deans relay)	1	1-3/4	2-1/2	2-1/2
CS-507M	10 channel multi relayless, New Haven high-freq. reed bank (lo freq. also available)	1	1-3/4	2-1/2	2-3/4
CS-508S	Single-channel relay, full arc suppression on points (Deans relay)	1	1-3/4	3	3
CS-508M	10 or 12 channel multi relayless, Medco or Deans high-freq. reed bank (lo-freq. also available)	1	1-3/4	3	3-1/2

Frequencies optional; however, single channel receivers delivered with 26.995 mc crystal unless otherwise specified.

High frequency reed bank matches C&S Transmitters as well as other leading brands. Low frequency reed banks available to match older transmitters.

SPECIFICATIONS
(ALL MODELS)

Sensitivity	2 microvolts
Bandwith	4 Kc at 6 db
Operating Voltage	4.8 volts minimum 6.0 volts nominal 6.5 volts maximum
Idle Current	9 ma nominal (carrier off) 13 ma nominal (carrier on) at 70°F
Audio Modulation Req'd (Single channel)	400-800 cps
Modulation Percentage Req'd	80-100%
Recommended Transmitter	
Single Channel	CS-502 or CS-509 Tone Transmitter
Multi Channel	CS-510 Multi Transmitter
Available Frequencies	26.995, 27.045, 27.095, 27.145, 27.195, 27.255, or special order
Pulsing Rate (Single channel)	Up to 25 pps
Operating Tempterature Range	0°F to +140°F

Both the CS-507 and CS-508 Receivers are identical in electronic components. Solid state circuitry is employed throughout, including six latest-type transistors and Clevite Transfilters (crystal filters) in the I.F. stages. No adjustable transformers are used, consequently the receiver cannot drift or vibrate out of alignment. The only tuning ever required is to peak the antenna circuit for maximum sensitivity with your specific transmitter and for the receiver installation in the aircraft. Frequency is varied by changing crystals.

Unless your own transmitter is turned on, you may notice that other transmitters on adjacent frequencies can operate your receiver. This is because your receiver is running "wide open"; turning on your own transmitter will activate the AGC circuit and reduce receiver gain and sharpen selectivity which prevents interference from other sources.

New high-frequency reed banks are used in C&S Receivers. Sensitivity to vibration is reduced to a minimum.

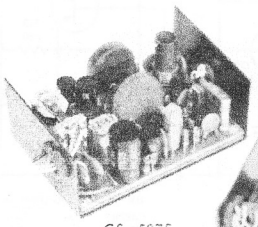
CS-507S

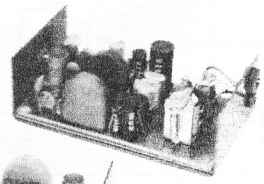
CS-508S

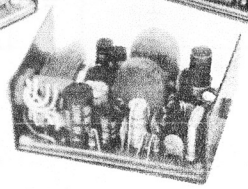
CS-507M

WIRING DIAGRAMS

Illustrations below show proper wire connections for both single and multi-channel receiver installations. Leads can be soldered directly through, or a plug and socket arrangement used for quick removal and service of the various components.

In the multi receiver, a red wire and black wire (coming through the small grommet) connect to the 6-volt power supply. Five or six wire pairs from the reed bank connect to the inputs of the corresponding servos. Suggested control functions as follows match the tone selection of the C&S transmitters.

Rudder - Brown Pair	Elevator - Green Pair
Aileron - Orange Pair	Trim - Blue Pair
Motor - Yellow Pair	Auxiliary - Red Pair

After hook-up, if a servo runs in the wrong direction, reverse connections of the input color pair to that particular servo to change motor direction.

Other combinations of control functions can be used with other make transmitters if desired. Make sure audio tone range of the transmitter you use matches the new high frequency reed bank in the C&S receivers. Also verify that your transmitter has sufficient tone frequency and output R.F. stability to insure reliable operation.

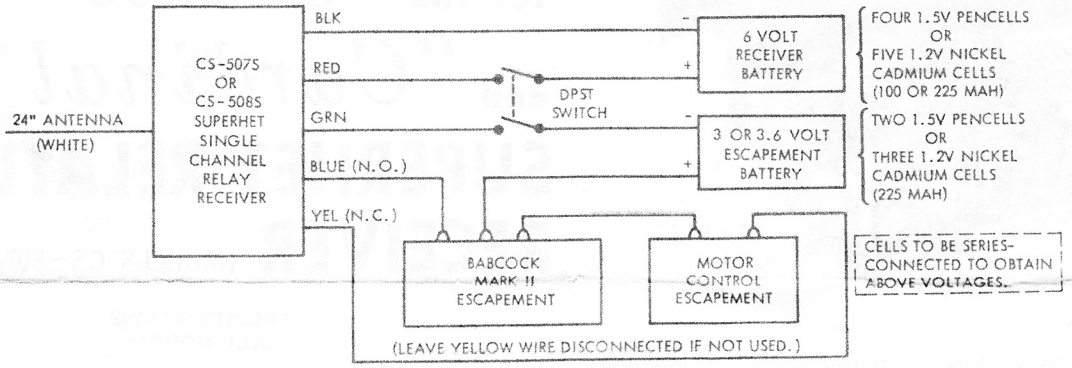

Single Channel Relay Receiver Wiring

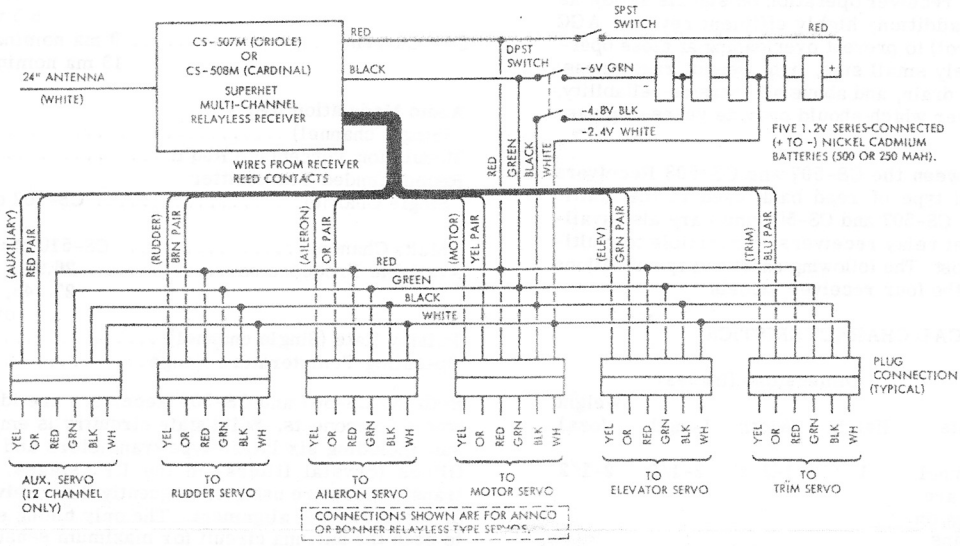

Multi-Channel Relayless Receiver Wiring

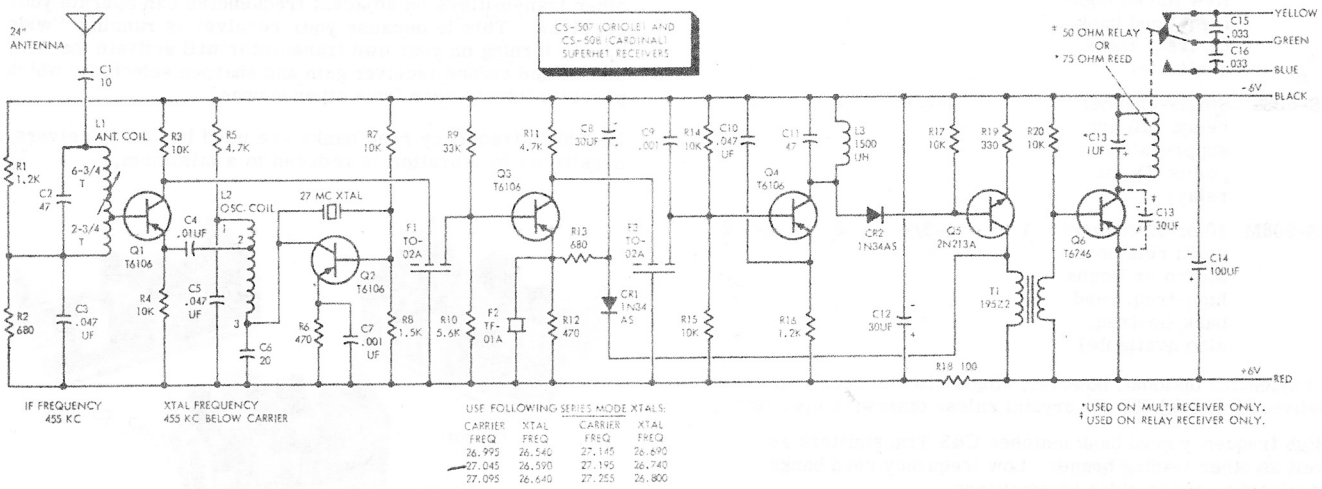

Schematic Wiring Diagram

BATTERIES

All receiver models are designed to operate from a 6-volt supply. The multi-channel receivers will work satisfactorily from the servo battery pack. Rechargeable nickel cadmium batteries, preferably 500 milliampere hour capacity, are in general use for this purpose. However, for smaller aircraft using low drain servos, 250 mah batteries will operate satisfactorily provided battery charge state is carefully watched. A good rule is to use the largest batteries your airplane can safely carry.

For single channel receiver installations we recommend one set of batteries for the receiver and a second set for escapement (or single channel servo) power. This will reduce possibility of interaction and electrical noise feedback to which superhet receivers are sometimes sensitive. Recommended battery types are shown on the wiring diagrams.

Whenever pencell batteries are used (single channel receivers) we highly recommend Alkaline Energizers (Eveready E91 or equivalent) for maximum life. Use of 3.6 volts or even 4.5 volts for single channel escapement operation is sometimes desirable to obtain the positive action needed on larger aircraft. A close check must be made on battery voltage with the receiver on and the escapement actuated. Always replace batteries when the voltage under load drops to 5 volts (receiver) and 2.5 volts (escapement). Receiver sensitivity drops rapidly as the supply voltage decreases, and, if flown with weak batteries, loss of range or failure of escapement operation may occur while in flight. A safe practice with standard pencells is to replace batteries before each flying session.

If the airplane is large enough to carry the weight, battery holders can be used. For smaller aircraft, we recommend soldering the wire leads directly to the batteries. In such a case, extreme care must be observed to avoid overheating the batteries while soldering. (Use rosin core solder only.) Carefully sand the battery terminals first, then apply only as much heat as necessary to obtain a good connection. Be sure to check the voltage under load after new batteries are installed.

TUNING THE RECEIVER

Antenna length and placement, receiver location, proximity of wiring and metal objects, etc., all affect receiver RF tuning. After installation in your airplane, car or boat, check your receiver tuning as follows:

NOTE

For non-slip tuning, we recommend that you remove the tuning slug from the antenna coil. Coat tuning slug threads very lightly with a thin layer of rubber cement, let it dry thoroughly, then reinstall in coil. Once done, slug will not vibrate out of position.

For initial adjustment, use transmitter without antenna. Starting with the transmitter near the receiver antenna, actuate the control button to obtain an audio tone signal (single channel). (With multi receiver, we recommend use of a non-neutralizing command, such as motor control, so servo will not be running more than necessary.) Actuator (or servo motor) should be energized by this signal. Release signal. Slowly increase distance between transmitter and receiver - continue keying at regular intervals. When receiver no longer responds, rotate the tuning coil slug, accessible through hole in receiver case top, with a plastic hex tuning wand available at your hobby dealer or radio supply dealer (GC #8282-7, Walsco #2543, or equivalent). Adjust slug until actuator (or servo) responds. Continue this process until maximum operating distance is obtained. This should be 10-15 feet or more, depending on antenna length and battery condition. Tuning should become sharper as the receiver-transmitter distance is increased.

NOTE

Some multi flyers prefer to use a helper and tune while listening for maximum reed tone in receiver.

Do not touch receiver, antenna or aircraft wiring while tuning, or a false tune may result.

Operational distances may vary considerably, depending upon surface over which test is made (pavement, grass, water), height of airplane above ground, humidity, etc. The same receiver could show response variations from 8 - 50 feet, depending upon specific conditions. Learn the characteristics of your equipment, establish a minimum standard range check and be sure that your unit meets these standards before each flying session.

For safety, a range check of approximately 1000 feet should be made with the transmitter antenna installed. Minor retuning may be required to obtain peak receiver operation. Once this is done the equipment is ready for use. However, be sure that correct operation is obtained every time a signal is sent. If not, check batteries and complete equipment installation to determine the cause of any malfunction.

TUNING TRANSMITTER AUDIO TONES

Although C&S Transmitters and Receivers are carefully matched at the factory, there will be occasions when you will wish to tune the transmitter tones to the receiver reed.

Operate transmitter with antenna removed and receiver with servos disconnected. This will avoid possible servo damage which could occur if two adjacent reeds were accidentally driven together. Actuate one control lever on transmitter and observe action of corresponding reed in receiver. Rotate related control pot in transmitter clockwise (increase frequency) until the desired reed stops vibrating. Release control lever, then operate it again. Slowly turn pot counterclockwise (reduce frequency) until reed just starts to vibrate. Turn pot very slightly counterclockwise beyond this point - reed should now be tuned properly. Repeat same procedure for each control function.

Check for simultaneous reed operation by keying two control levers at the same time, for example right rudder and up elevator. Both reeds, or servos if connected, should operate together. In event only one function operates, hold both levers ON while "touching up" the control pot for the control that does not operate. A slight pot adjustment should make this command operative. Recheck for positive simultaneous action. Repeat for the other simultaneous controls.

CONVERTING SINGLE CHANNEL TO MULTI

Factory conversion of your single channel superhet receiver to a 10 or 12 channel multi unit is available at moderate cost. Price (at time of printing) for this 10-channel conversion is $23.00 and return postage and insurance, subject to change without notice. Price for the 12-channel conversion is $33.00 plus postage and insurance.

New Haven reed banks are installed in Oriole receivers when converted; please specify either Medco or Dean's reeds, 10 or 12-channel, for the Cardinal conversion.

Send all receivers for conversion directly to C&S Electronics Repair Station, 1726 E. Earll Drive, Phoenix 16, Arizona, NOT TO THE DEALER. No discounts are allowed on conversions. Pack unit carefully, enclose conversion cost, postage and insurance, and allow about two weeks for service. Unit when converted will be identical to original factory built receivers in every respect. Repairs, if necessary, will be charged separately. After conversion (and repair, if required) your unit will carry a new receiver warranty for 90 days.

REED CONTACT ADJUSTMENT

Reed contacts are factory set for correct gap and normally should require no adjustment. Individual reed screws permit adjustment of Medco and Dean's reeds; adjustment of New Haven contacts is performed by carefully bending the contact finger in direction desired, following with a nudge in the opposite direction to normalize finger position. Use a flat wooden toothpick for bending, but never bend fingers beyond their normal range (to see point of contact) or they may be ruined. Normal contact spacing (New Haven) is 1/32" to 3/64". However, we must warn against all unnecessary tampering with reed contacts.

Never burnish, file or scratch contacts. If cleaning is required, use a coarse paper strip (which may be lightly moistened with solvent) or just a wood toothpick.

MATCHING RECEIVER-TRANSMITTER FREQUENCIES

Crystals in your transmitter and receiver determine the RF operating frequency. Should you desire to change frequencies, we recommend that you return both units to the factory where frequency change will be performed for $10.00. This includes unit check out and tune up.

Although crystals are very close tolerance (.005%) it is possible that transmitter and receiver crystals could be far enough off to degrade performance and reduce range. This is most likely to occur when receivers are used with transmitters without crystal matching (in C&S matched sets, both crystals and audio tones are matched). Should mismatch be suspected, regardless of equipment make, C&S will verify crystal matching for $5.00.

Transmitter audio tone matching (padding) to C&S Superhet multi receivers will be performed at a charge of $5.00, plus parts. This does not cover conversion of transmitter from low to high frequency operation.

For all above services, send both equipment items to C&S Repair Station (address on last page). Be sure to include return postage and insurance.

WARRANTY

This equipment (except vacuum tubes and transistors) is warranted by C & S Electronics to be free of defects in material and workmanship for a period of ninety days. However, this guarantee is void should the manufacturer judge the defect to be caused by abuse, crashes, over-voltage, incorrect battery polarity or other misuse by the customer.

Repairs within warranty will be provided at no cost to the user except for transportation and insurance. Other repairs will be performed at a nominal charge of $3.00 plus cost of parts. When damage occurs which is too extensive for repairs, unit replacement will be made at a cost to user equivalent to 65% of retail price of equipment.

In event of trouble return unit direct to the factory, NOT TO THE DEALER. Repairs are not priced for dealer discounts. Equipment will be serviced and returned within a few days.

When sending equipment to the factory for service or repairs, package it carefully, include name and address and be sure to enclose cost of return postage and insurance. Equipment will not be serviced or returned without this remittance. When repairs are chargeable to customer, he will be notified as to cost so remittance can be made. No C.O.D.'s or credit on service.

In event of trouble do not hesitate to return equipment to the factory for service or checkup. The C & S service policy is to perform minor checkups and adjustments whenever possible without charge; in short, to see that our equipment continues to give maximum performance.

Please fill in the following warranty form within 10 days and return it to the factory as a record of your equipment purchase. Warranty service will be performed only on equipment so covered.

SEND ALL REPAIRS AND SERVICE TO:

C&S ELECTRONICS REPAIR STATION
1726 E. EARLL DRIVE
PHOENIX 16, ARIZONA

Litho in U.S.A.

Cut along dotted line and mail warranty to C & S Electronics Repair Station

C & S Equipment Warranty

Purchasers Name: _____

Address: _____

Equipment: _____

Purchased From: _____ Date of Purchase: _____

Address: _____