SPECIFICATIONS

Weight 2.1 Oz. Travel 5/8"
Size 1 1/4 X 1 1/2 X 2 1/2
Voltage 1.2 to 4.5
Current used at 3 Volts

| | |
|---|---|
| No Load | 80 MA |
| One Pound Load | 160 MA |
| Stall | 350 MA |

Mazimum Power 4 1/2 Pounds
Broad Neutral if Desired
Unequal UP or DOWN if Desired
Response Time .42 Second
Precision Long Life Instrument Timer Type Gears

# COBB HOBBY's Micro'

## MULTI-SERVO

## $9.95

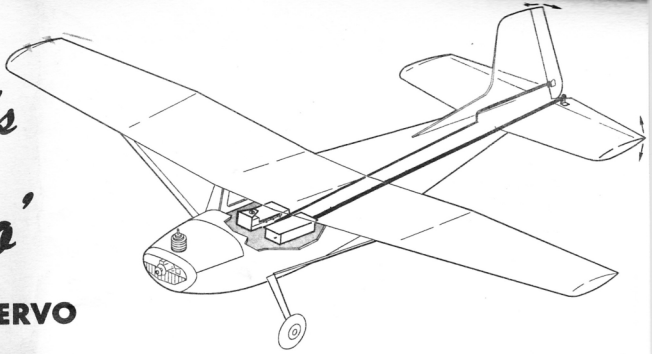

- **Low Drain**
- **High Power**
- **Top Quality**
- **Moderate Cost**

Environment Tested for 1000 Flight Life... on our New "FLIGHT SIMULATOR" ... Duplicating Flight Load and Vibration Conditions.

The MICRO Motor is by far the most efficient in use today--Highest torque for current used... Custom built by Worlds Largest Motor Manufacturer for our EXCLUSIVE use. Uses Oilite bearings and Long Life Brushes.

Straight wiper fingers -- Will Not Loose Tension

Precision long life instrument timer gears - Tested 6 million revolutions under load to assure long life.

ACROSS FUSELAGE MOUNT

This type installation may also be used to locate the rudder and elevator servo side by side.

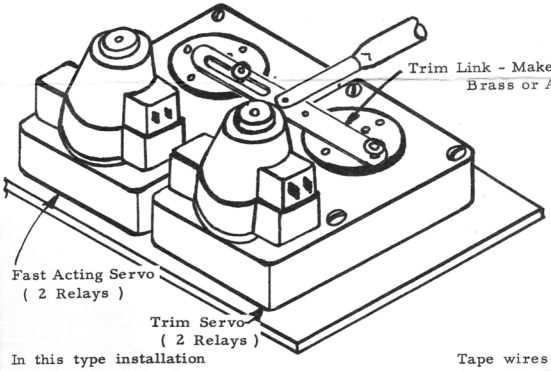


In this type installation 2 channels are used to "Trim the elevator and 2 are used to provide fast operation.

MICRO' MOUNTED DIRECTLY TO FUSELAGE

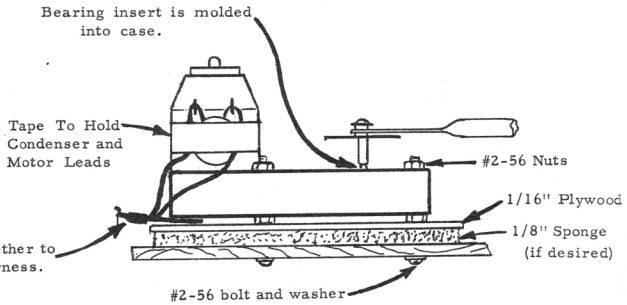


COBB HOBBY MANUFACTURING CO. Powder Springs, Ga.

Phone: Marietta, Ga. - 7-3405

PUSH ROD 1/2 size

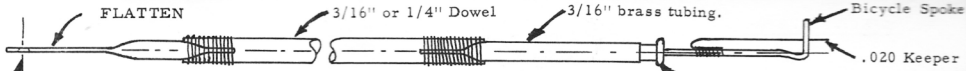


Note: After assembling the tubing and dowel, cement and bind with thread. Drill 1/16" hole and install 1/16" wire shear pin.

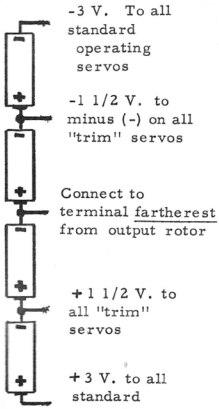


Diagram showing one or more servos on 1 1/2 V. and one or more on 3 V.

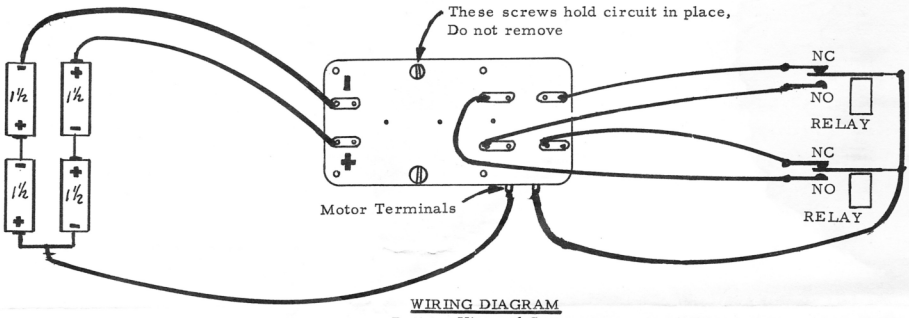


WIRING DIAGRAM
Bottom View of Servo

If pencells are used voltage will be 1 1/2 or 3 Volts

If nickle cadimum cells are used voltage will be 1.2 or 2.4 Volts. 3.6 may also be used without excessive drain on batteries.

NOTE Wires should be arranged in a FLAT strip and taped together.

DO NOT cross wires over each other under the servo - This will bow the circuit and cause binding of the gear train.

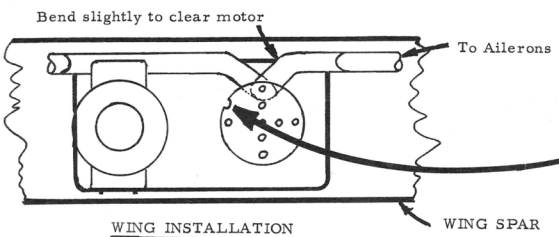


WING INSTALLATION

IMPORTANT Output Rotor Must be positioned with half-moon on side nearest motor. Rotate motor with a BATTERY if in wrong position Before connecting wiring.

Do not alter finger pressure as this will cause excessive circuit wear.

A small amount of oil may be applied to all bearings and gears. Oil will not affect the operation of the switch.

## SOLDERING INSTRUCTIONS

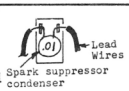


The plastic case of the Motor can be damaged unless care is used in attaching lead wires.

PROCEED AS FOLLOWS ---- See Sketch

1- Clean and "Tin" (apply solder) to the condenser leads (not included) BEFORE attaching it to the motor.

2- Thread the condenser leads thru the motor terminals.

3- Use 50 Watt iron. Apply rosin solder to the iron.

4- Apply this melted solder to the motor terminal. Hold iron in place only long enough for the solder to "Flow" on the joint.

5- Apply damp (not wet) cloth to absorb heat.

6- Clip condenser leads to ½" and connect leads to these "tails". DO NOT ATTEMPT TO REMOVE THE CONDENSER OR RESOLDER THE MOTOR TERMINALS.

Always "Tie Down" all leads from the actuator to prevent breaking due to vibration.

BONDING RELAY ARMATURE

Most relays have a very poor connection from the armature (moving part) to the frame. For reliable results this must be improved by making a direct connection. On receivers having 3 mills or more current change, the tension spring may be soldered at both ends--- very carefully. Other receivers will have to have a very flexiblestranded wire connection.

## CIRCUIT ALTERATIONS

Cut with sharp exacto knife and peel off.

For More Travel in One Direction Than the Other Trim on one side at this location.

For Broad Neutral Trim Copper off Here Equally- Both Sides

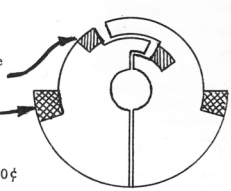

New Circuit Boards can be ordered for 50¢