SEQUENCE
ONE SIGNAL - RIGHT RUDDER
TWO SIGNALS - LEFT RUDDER
THREE SIGNALS - UP ELEVATOR
FOUR SIGNALS - DOWN ELEVATOR
QUICK SIGNAL - CHANGES MOTOR

Single Channel

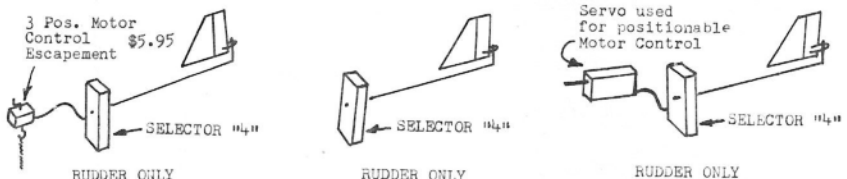

Multi Control System With Simultaneous RUDDER AND ELEVATOR OPERATION

Control
RIGHT
LEFT
UP
DOWN
MOTOR
TAIL WHEEL
BRAKES

USE WITH ANY TRANSMITTER AND RECEIVER

Slim Line SERVO $8.95

Selector "4" COMPOUND ESCAPEMENT $8.95

FOR CONTROL
- USE TRANSMITTER "KEY"
- OR "PILOT CONTROL" STICK BOX

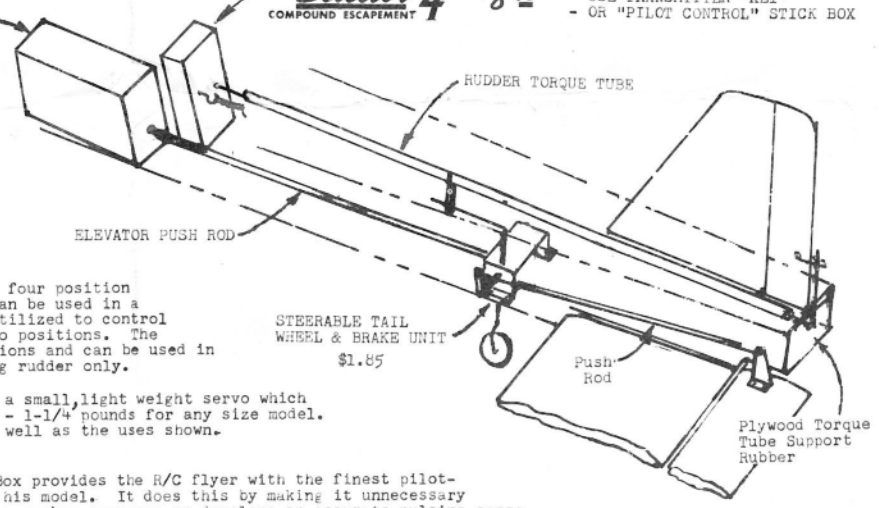

How it Works

Selector "4" COMPOUND ESCAPEMENT The SELECTOR "4" is a four position compound escapement which can be used in a variety of ways. A cam is utilized to control the rudder using the first two positions. The third and fourth positions are switch positions and can be used in any desired manner or left unused for flying rudder only.

Slim Line SERVO The Slim Line Servo is a small, light weight servo which will provide ample power - 1-1/4 pounds for any size model. It can be used for multi tone receivers as well as the uses shown.

Pilot Control The Pilot Control Stick Box provides the R/C flyer with the finest pilot-like control possible for his model. It does this by making it unnecessary for the flyer to learn and remember sequence or develope an accurate pulsing sense. It leaves him entirely free to develop his piloting skill. The Pilot Control Stick Box is the perfect companion to the SELECTOR "4" Escapement. Together, they provide the most complete precision control system available at a price well under that of any other multiple control equipment.

Simultaneous operation is obtained by giving up or down elevator and then following with rudder operation. True spins and other interesting maneuvers can be performed in this manner.

Steerable Tail Wheel

The tail wheel is linked to rudder torque tube similar to rudder. Each time the rudder moves, the tail wheel moves.

Brakes

When Servo moves to up, a light (.015") wire locks tail wheel

TAIL WHEEL AND BRAKE UNIT

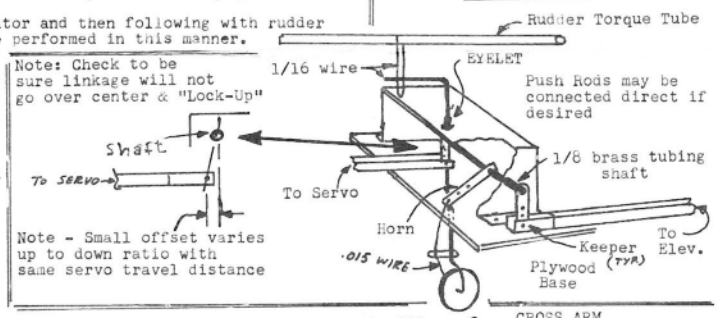

Pilot Control

Pilot Control Stick Box Instructions

This unit will give long and trouble free service, but as with any piece of mechanical equipment, some understanding of its principles and limitations will be helpful.

Pilot Control for Babcock, Bonner, Citizenship and other escapements require a treadle switch to prevent the box from sending more signals than desired. The treadle switch is not required for the SELECTOR "4".

Adjustment of the treadle switch

The somewhat delicate nature of the switch requires care to avoid damaging while the cover is removed. Properly adjusted, the switch will make contact just before the rotating arm is released. The treadle switch is in series with the printed-circuit pulsing switch. This is necessary so that the second escapement will not be tripped unless up or down is wanted. Occasional cleaning with carbon tetrachloride is advisable.

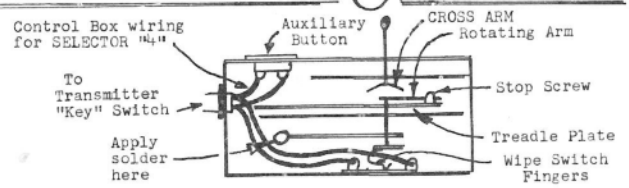

The Pilot Control Box will send about 100-125 signals before the spring runs down. Rewinding in flight is permissible but seldon necessary. Experience with the sound of the box will tell you when it is running down. NEVER wind the spring tight while flying. Always wind up the spring ONE TURN at a time while flying, to insure accurate selection of controls, particularly UP and DOWN. LEFT and RIGHT will function under any conditions.

Timing of Box and Escapement

The reaction time of receivers will vary. It is desirable to have as rapid an action as possible and some testing should be done to be sure your receiver will keep up with the Control Box. Solder may be applied to the governor arm to slow down the box if necessary. Position box so the hot solder will not fall on gears or spring.

Bent Rotating Arm

Occasionally the stick cross arm will strike the rotating arm. This is caused by moving the stick rapidly around while the arm is moving. Never move the stick while the Control Box is running. The Escapement wont follow if you do and you may bend the rotating arm. If it is bent, straighten it so that it is parallel to the treadle plate. Do not straighten the slight bend near the end of the arm. This is normal.

Printed Circuit Wipe Switch

Never attempt to bend the pulsing switch wipe fingers. They were properly adjusted and will never need any maintenance. If they are accidently bent, return the Control Box to the manufacturer for repairs.

JUST PUSH STICK... LEFT, RIGHT, UP or DOWN "BRAIN" Sends Correct Signal.
- USE WITH ANY TRANSMITTER
- 2¼"X2¼"X4" Wt. 6 Oz.

$12.95

Instructions for installing switch parts

1. Remove acorn nuts (3)
2. Remove top plate and eyelets
3. Remove stop screw and nut
4. Remove nut but do not allow plates to spread apart. Use care not to bend switch fingers
5. Install treadle switch parts as shown and adjust after reassembling box

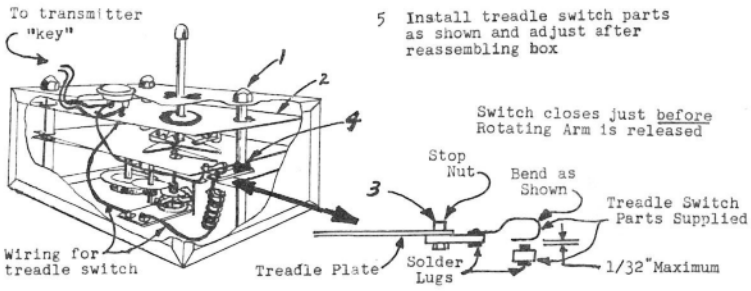

WIRING DIAGRAM

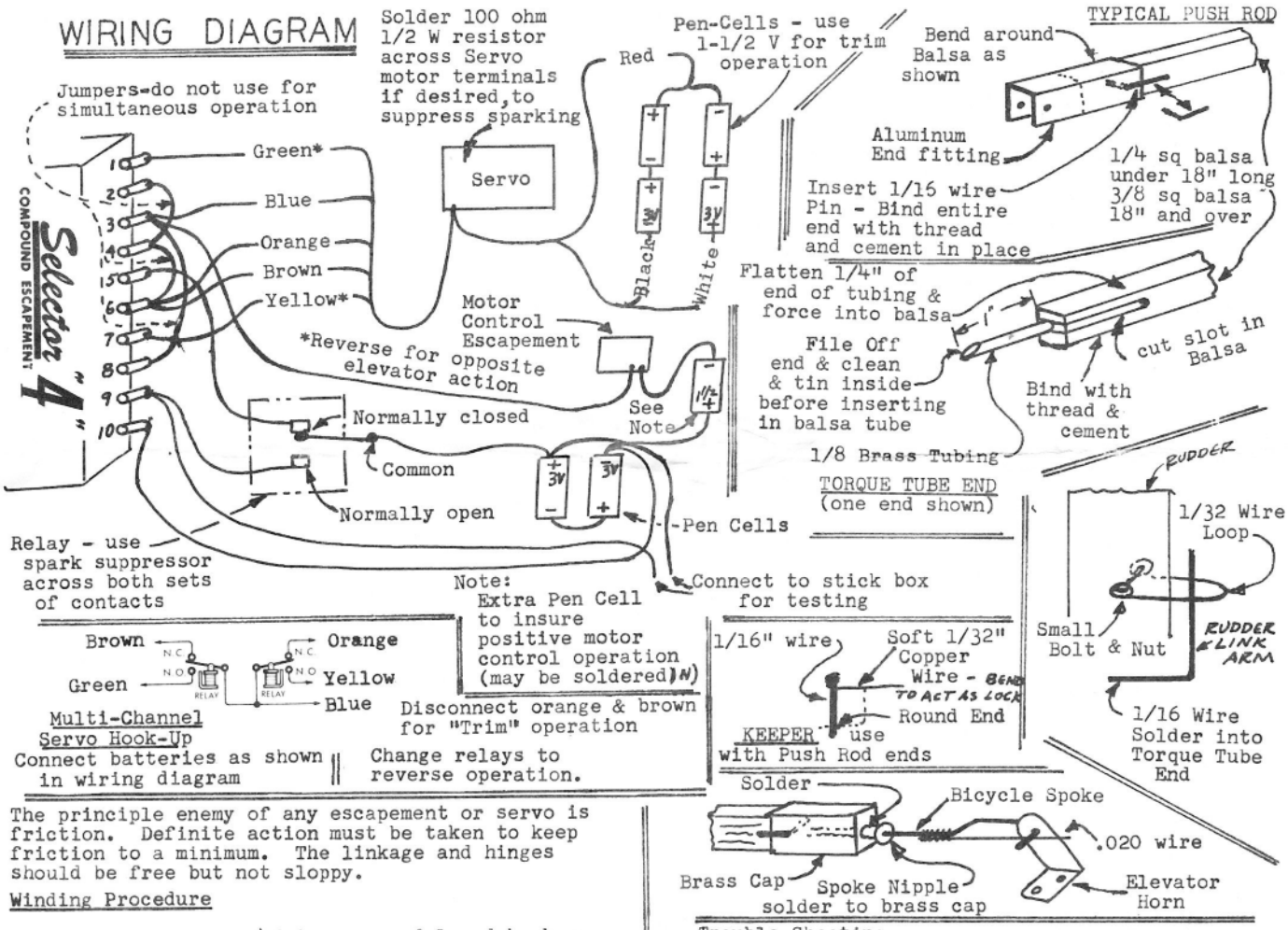

The principle enemy of any escapement or servo is friction. Definite action must be taken to keep friction to a minimum. The linkage and hinges should be free but not sloppy.

Winding Procedure

Mount your SELECTOR "4" in your model and hook-up the Pilot Control Box directly (leave out the transmitter and receiver). Wind-up the rubber gradually until accurate operation is obtained (be sure stick box is fully wound) - now wind until the escapement will not operate, using old batteries of about 2-1/2 V under load. This is the number of turns you should use. Count the turns by unwinding and be sure to wind this number before each flight. New rubber should be wound and unwound several times to get rid of the initial heavy torque. IMPORTANT If the Pilot Control Box runs down during a flight, and this is not likely, wind it only one turn as needed so that the Control Box will not run too fast for the escapement which will have slowed down by then.

Flying

Fly ship first with enough power to climb but not full power - choke engine and fly with rudder and a small (1/8") amount of UP elevator movement and no DOWN. Gradually add control after learning to use it. Add motor control next then connect tail wheel and brakes when you are ready. Time will be required to work out the system and get all units working perfectly.

On long flights of 15 minutes or more the escapement rubber may unwind to a point where the Pilot Control Box will run too fast for the escapement. Nothing serious will result since when signaling DOWN (4th position) the servo will be switched to UP (3rd position). With the escapement running this slowly it will be very easy to signal DOWN with the button.. RIGHT and LEFT will respond normally.

Simultaneous Operation of Rudder and Elevator

This should be attempted only after considerable practice with the usual maneuvers and at very high altitude since maneuvers resulting from simultaneous R/E operation can be very violent and consume much altitude. With large models, over 56" or 4 pounds, never attempt simultaneous operation near the end of a flight since the rudder power available may not be sufficient to allow neutralizing. It is quite safe while the escapement is over 1/2 wound using 1/4 flat rubber.

Trouble Shooting

If you fail to get the correct control movement you should find out whether the trouble is:

1. in the radio, transmitter or receiver
2. in the escapement or other equipment

Proceed as follows using the "Test" leads and plug with alligator clips attached. "Plug in" the Pilot Control Box in the escapement circuit as shown on the wiring diagram using the jack provided.

Using this procedure will enable you to operate your controls independent of the radio. This may be done with the motor running, if desired, to pin down the trouble.

Radio Troubles

Refer to the manufacturers instructions.

Escapement Troubles

Be certain escapement is wound fully (refer to Winding Instructions). Use 3/16" or 1/4" rubber on escapement when using Pilot Control Box - use 1/8" when using a "Keying" button. Make rubber loop 3 or 4 inches longer than distance between hooks. Check the escapement battery voltage under load. Discard if below 2-1/2V.

Most loss of control and skipping is caused by relay and radio troubles, double signals and the like. Motor vibration can also give trouble.

Get all set up ready to fly. Take the rig out in the back yard and completely check out the system. Tie the model down, start the engine and go through several hundred turns and other maneuvers. Everything must work perfectly without a hitch on the ground to insure success in the air. A slow reliable model is a good start toward successful, satisfactory results.

It cannot be stressed too strongly, that the escapement is the end result of other equipment operating properly. A reliable transmitter - receiver - relay system is a must for pleasurable flying.

COBB HOBBY MFG. CO., POWDER SPRINGS, GEORGIA