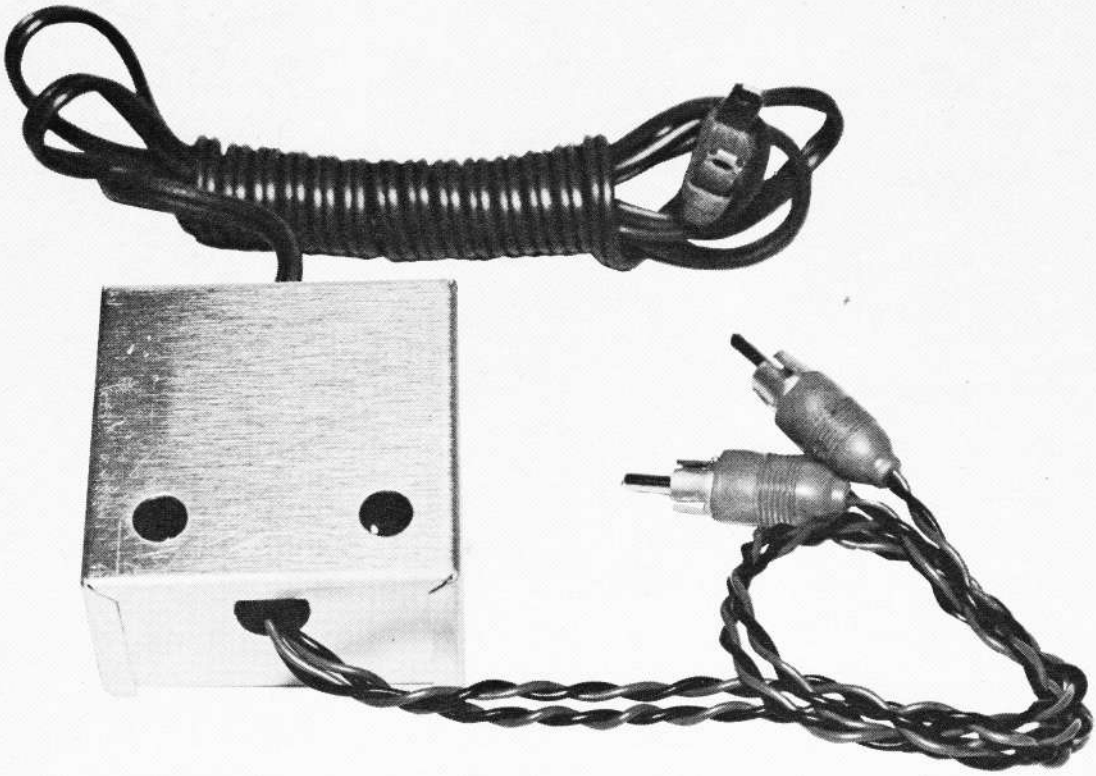

DUAL DIGITRIO CHARGER

BY BOB MC KNIGHT

THIS charger was designed for use with the Digitrio system, and has the following features: The use of an isolation transformer to eliminate shock hazard, a series connected charge indicator light for each output that tells when batteries are charging; duel output that allows you to charge both the transmitter and receiver batteries simultaneously.

The aluminum case for the charger measures 2¼" x 2¼" x 1⅜". These dimensions are not critical, and a larger box may be used if desired. The PC board is shown full size and may be made by the standard photo process, or due to the simplicity of the board, may be mechanically constructed by scribing the outline of the rectangular lands with an X-Acto knife and then carefully peeling away all excess copper. Before starting, check fit of the circuit board in the case bottom. Trim to fit if necessary.

( ) 1. Cut 12V transformer leads to ½" length. Strip ¼" insulation from each lead. Insert black leads into holes 21 and 22. Insert Green leads into holes 19 and 20. Temporarily mount the transformer to the PC board with 4-40 x ⅜ bolts and locknuts. Solder the Green and Black leads to their corresponding lands.

( ) 2. Insert line cord through one of the 3/16" grommets. Split the line cord back 2" and tie a knot for strain relief. Strip ¼" insulation from both leads and pre-tin. Insert leads into holes 23 and 24 and solder.

( ) 3. Insert one diode into hole 12 with red end up and solder. Insert other lead (red end) into hole 13 and solder.

( ) 4. Insert other diode into hole 11 with red end up and solder. Insert other lead (red end) into hole 10 and solder.

( ) 5. Insert 100 ohm resistor into holes 14 and 15 and solder. Resistor should stand up over hole 14.

( ) 6. Insert 47 ohm resistor into holes 5 and 6 and solder. Resistor should stand up over hole 6.

( ) 7. Mount one #49 pilot lamp as follows:
Solder a ½" piece of scrap diode lead to copper side of PC board crossing over the center of hole 16. See Fig. 1 and picture for correct location. Center #49 pilot lamp over hole 16. Pilot bulb should stand in a vertical position. While pressing bulb firmly against board quickly solder the center terminal of bulb to the wire lead previously installed. Avoid heating the bulb too much as heat can damage the filament. Insert a small piece of scrap resistor lead in hole 2 and solder. Bend this lead over against the base of the bulb and solder. See picture.

( ) 8. Mount the other #49 pilot lamp in the same manner. Solder a ½" piece of scrap diode lead on the copper side

---

RCM Technical Editor's Note: *The charge rates for the McKnight charger were measured at 20-25 mah. This is adequate for extended charging, but a higher rate is recommended for the standard practice of overnight charging. I recommend 30-35 mah as the minimum charging rate. This can be obtained by reducing the 100 ohm receiver battery series limiting resistor to 47 ohms, and replacing the 47 ohm transmitter battery series limiting resistor with a length of resistor lead. This change will cost you nothing if you're building from the Controlaire kit since the necessary material is supplied.*

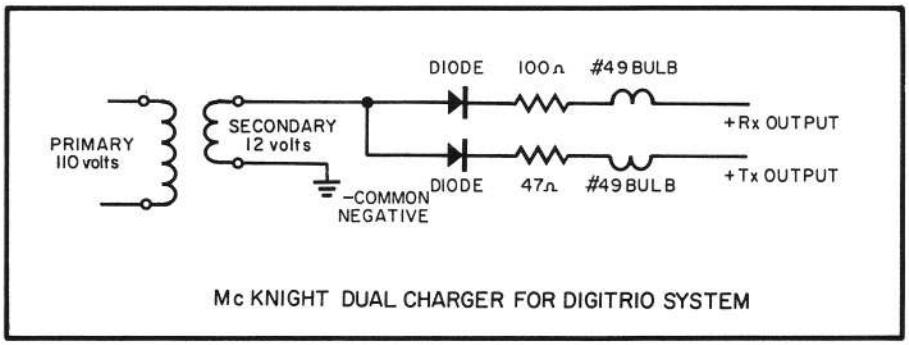

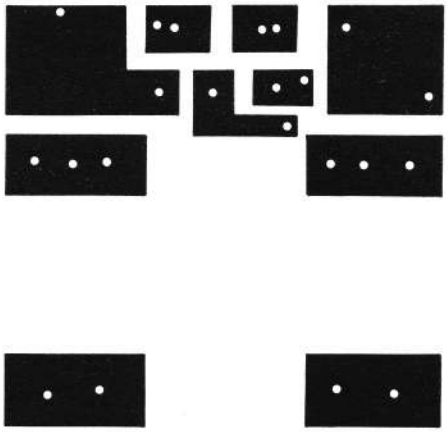

Charger schematic shown above. Full size printed circuit board at left.

of the PC board crossing over hole 9. Center the #49 pilot lamp over the hole and while pressing the bulb firmly against the board quickly solder the center terminal of the bulb to the wire lead. Insert a piece of scrap resistor lead in hole 7 and solder. Bend this lead over against the base of the bulb and solder. See picture.

( ) 9. Cut two 18" lengths of black insulated wire. Strip ¼" insulation from one end of each wire. Insert these two black leads into holes 17 and 18 and solder.

( ) 10. Cut two 18" lengths of red insulated wire. Strip ¼" insulation from one end of each wire. Insert these two red leads into holes 3 and 4 and solder.

( ) 11. MOUNTING CHARGER INTO CASE: Insert ¼" grommet into hole in end of case bottom. Lay the insulator sheet in bottom of case. Remove the 4-40 x ⅜" bolts and nuts holding the transformer to the PC board. Insert charger into case with the red and black leads threaded through the ¼" grommet. The line cord and grommet should slide over the notch in the end of the case. Insert the 4-40 x ⅜" bolts through the bottom of the case, through the insulator sheet, PC board and transformer mounting tabs. Bolt firmly together with 4-40 lock nuts.

( ) 12. RECEIVER OUTPUT: Take the black lead from hole 17 and the red lead from hole 3. Twist these two leads together to form a cable. Cut the leads so that the red lead is ¾" longer than the black lead. Strip the Black lead back 3/16" and the Red lead should be stripped back ⅝". Pre-tin these leads. Insert the Red lead through the center pin of the phone plug and solder. Solder the Black lead to the outside terminal of the phone plug. Push rubber cap down over the phone plug. The phone jack should be connected to the battery pack. The center terminal (red lead) should be connected to the plus end of the battery pack. The side terminal (black lead) should be connected to the minus end of the battery pack.

( ) 13. Transmitter output: Take the black lead from hole 18 and the red lead from hole 4. Twist these two leads together to form the other output cable. Cut the leads so that the red lead is ¾" longer than the

(Continued on Page 62)

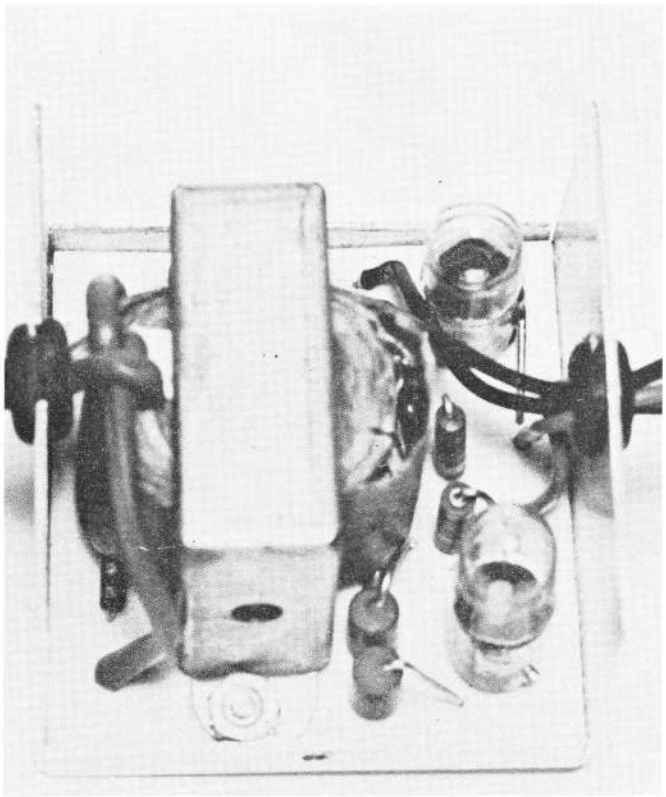

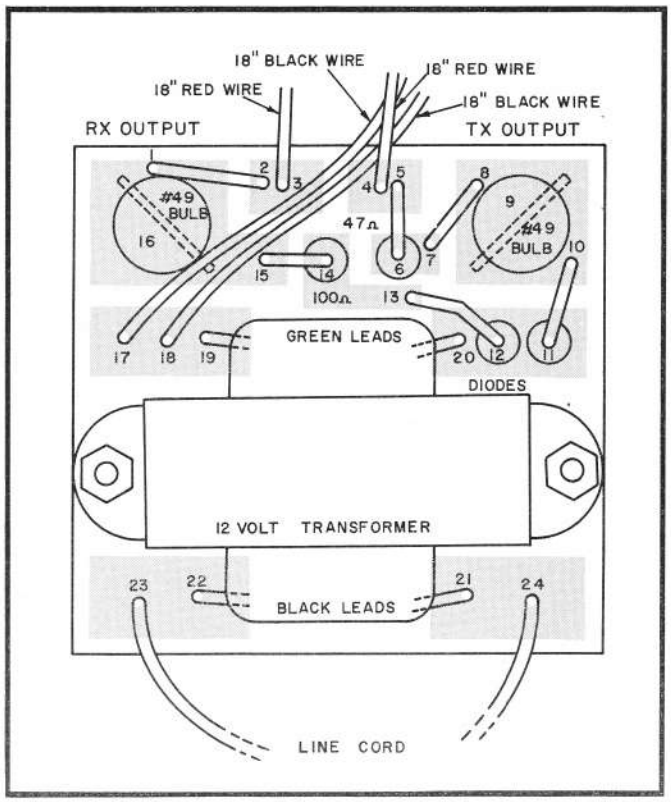

(Continued from Page 37)

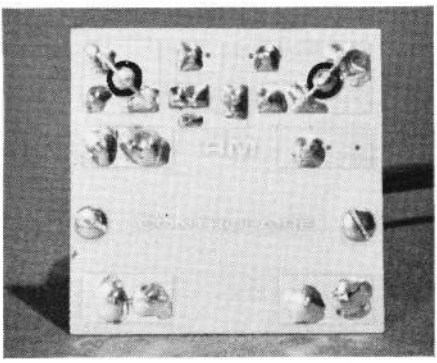

Bottom view of PC board showing center terminals of pilot lamps soldered to diagonal wires.

Black lead. Strip the black lead back 3/16" and the red lead should be stripped back 5/8". Pre-tin these leads. Insert the end of the cable through the remaining rubber cap. Insert the red lead through the center pin of the phone plug and solder. Solder the black lead to the outside terminal of the phone plug and push the rubber cap down over the phone plug. Wire the phone jack in your transmitter so that the center terminal is plus and the outside terminal, or case, is negative.

( ) 14. Install top lid and secure with two #6 x 1/4" sheetmetal screws. Charger is now ready for use. NOTE: The receiver and transmitter charging plugs should be marked so that you will be able to identify them.

Operation

Connect charger plugs to both transmitter and receiver batteries before 110 volt AC plug is installed into wall socket. 500 MAH cells should be charged 24 to 30 hours when new. After this and before each day's use, a recharge of 20 hours will keep them in top condition. Recharge time depends upon previous use. If you are in doubt, charge for 24 hours.

Top view of PC board showing installation of wires soldered to base of pilot lamps.